Monolithic urethane conveyor Belts

Engineering Manual

ELAClean®

Elatech®
Technology in Motion.

ELAClean® Engineering Manual - Contents

1.PRODUCT RANGE 2
1.1. ELAClean® BELT 2
1.1.1 ECW-P1N POSITIVE BELTS 4
1.1.2 ECW-P2N POSITIVE BELTS 5
1.1.3 ECW-C4N SELF CENTERING POSITIVE BELTS 6
1.1.4 ECW-F3N FLAT BELTS 8
1.1.5 SURFACE TEXTURE 9

1.2. ACCESSORIES 10
1.2.1 CLEATS 10
1.2.2 SIDEWALLS 15
1.2.3 V-GUIDE 16
1.2.4 SPROCKETS & IDLERS 17
1.2.5 RETURN ROLLERS 20
1.2.6 RETAINING RINGS 21
1.2.7 ADAPTORS 22
1.2.8 SCRAPERS 23
1.2.9 FASTENERS 24
1.2.10 SIDEWALL MECHANICAL FASTENERS 25

1.3 BELT SPLICING 26
1.3.1 AUTOMATIC BUT SPLICING 27
1.3.2 HOT BLADE WELDING (manual butt splicing) 28

1.4 MECHANICAL FASTENING 29
1.4.1 FLEXCO PLASTIC FASTENERS 30
1.4.2 FLEXCO METALLIC FASTENERS 31

2. BELT FABRICATION 32
2.1 CLEATS 32
2.1.1 STRAIGHT CLEAT 32
2.1.2 INCLINED CLEAT 33
2.1.3 BENT & SCOOP CLEAT 34
2.1.4 GUSSETED CLEAT 35

2.2 SYNCHRONIZED SIDEWALL 36

2.3 RECOMMENDATIONS 37
2.3.1 SIDEWALL 37
2.3.2 V-GUIDE 37
2.3.3 CLEAT POSITIONING 37

3. CONVEYOR DESIGN GUIDELINES 38
3.1. GENERAL 39
3.1.1 HYGIENIC DESIGN 40
3.1.2 MATERIALS 40

3.2. CONVEYOR CONSTRUCTION 41
3.2.1 FRAME AND SUPPORTS 41
3.2.2 SPROCKETS 41
3.2.3 BELT SIDE GUIDELINES 42
3.2.4 CONVEYOR SPEED 43
3.2.5 CONVEYOR LENGTH 43
3.2.6 BELT LENGTH CALCULATION 43
3.2.7 PRE-TENSION 43
3.2.8 EFFECTS DUE TO THE TEMPERATURE 43
3.2.9 TAKE-UPS SYSTEMS 44
3.2.10 QUICK RELEASE DEVICES 44
3.2.11 LATERAL CONTAINMENT 45
3.2.12 SCRAPERS 46
3.2.13 FEEDING THE TRANSPORTED MATERIAL 47
3.2.14 DESIGNING AXES AND SHAFTS 48

3.3. BELT SUPPORT ON CARRYING SIDE 50
3.3.1 GENERAL 50
3.3.2 FLAT PLATE SUPPORTS 50
3.3.3 WEARSTRIPES (PARALLEL AND V-SHAPED) 51
3.3.4 V-SHAPED WEARSTRIPS 52
3.3.5 SUPPORT ROLLERS 53

3.4. BELT SUPPORT ON RETURN SIDE 53
3.4.1 GENERAL 53
3.4.2 RETURN ROLLERS 53
3.4.3 WEAR SHOES 55

3.5. FLAT BELT CONVEYOR DESIGN 56
3.5.1 GENERAL 56
3.5.2 DRIVE TYPE 56
3.5.3 DRIVE AND IDLER DRUMS 58
3.5.4 BELT TRACKING 58

3.6. POSITIVE DRIVE BELT CONVEYOR DESIGN 62
3.6.1 GENERAL 62
3.6.2 DRIVE TYPES 62
3.6.3 DRIVE AND IDLER SHAFTS 65
3.6.4 BELT TRACKING 67

3.7. CENTER DRIVEN BELT 68
3.7.1 GENERAL 68
3.7.2 DRIVE TYPES 68
3.7.3 DRIVE AND IDLER SHAFTS 69
3.7.4 BELT TRACKING 73
3.7.5 PRESSURE ROLLER 74

4. CONVEYOR LAYOUT 75
4.1. HORIZONTAL CONVEYORS 75
4.1.1 GENERAL 75
4.1.2 CONVEYOR LAYOUT 75

4.2 INCLINE/DECLINE CONVEYORS 76
4.2.1 GENERAL 76
4.2.2 INCLINE CONVEYOR 76
4.2.3 DECLINE CONVEYOR 76

4.3. "L" CONVEYOR AND "Z" CONVEYOR 77
4.3.1 GENERAL 77
4.3.2 BELT GUIDANCE IN THE CONCAVE 78
4.3.3 BELT GUIDANCE IN THE CONVEX CURVE 79

4.3. "L" CONVEYOR AND "Z" CONVEYOR 77
4.4.1 GENERAL 80
4.4.2 TRANSITIONAL AREA 80
4.4.3 TROUGH ANGLE 81

5. CLEANING & SANIFICATION 82

6. CHEMICAL COMPATIBILITY 85

7. CODE IDENTIFICATION 88

ELAClean® BELTS
MONOLITHIC URETHANE CONVEYOR

1.PRODUCT RANGE

INTRODUCTION

ELATECH®, a fully dedicated Company to the research, development and manufacturing of polyurethane belts for industrial applications, enlarges its product range with specific monolithic urethane conveyor belts for the FOOD industry, designed for applications where the food contact requires the highest hygiene standards. The new **ELAClean®** product line comes with a wide range of accessories, tools and customizations in the continuous aim of supporting the customer in all the conveyor design and construction.

When selecting a belt, it is important to take all relevant factors into account:

- Nature of the conveyed material (grip, consistency, weight, shape, temperature etc.)
- Process parameters if applicable, e.g. for drying, washing and draining (temperature, pressure, necessary permeability etc.)
- Basic conveyor layout (direction, length, width)
- Drive position and type (sprocket driven/friction)
- Belt speed and operating modes (e.g. stop&go, cycling, positioning)
- Layout conditions at the installation site
- Ambient conditions during operation (temperature, humidity, chemical and mechanical loads)
- Hygiene/cleaning requirements

Belt dimensions may change in operation due to loading and the operating temperature. Take this into account when determining your conveyor design.

1.1. ELAClean® BELT

The **ELAClean®** belt is made of high-quality food approved polyurethane compound with superior properties in terms of flexibility, durability and abrasion resistance. **ELAClean®** smooth/matte, non-porous and easy-to-clean surface make it virtually resistant to contamination of oil, grease, moisture and bacteria, allowing a significant cleaning water and labour savings.

This is why it is exceptionally well suited to use in especially hygiene-critical applications such as:

MEAT

POULTRY

DIARY

BAKERY

PASTRY

CANDY

SEAFOOD

FISH

FRUIT

VEGETABLE

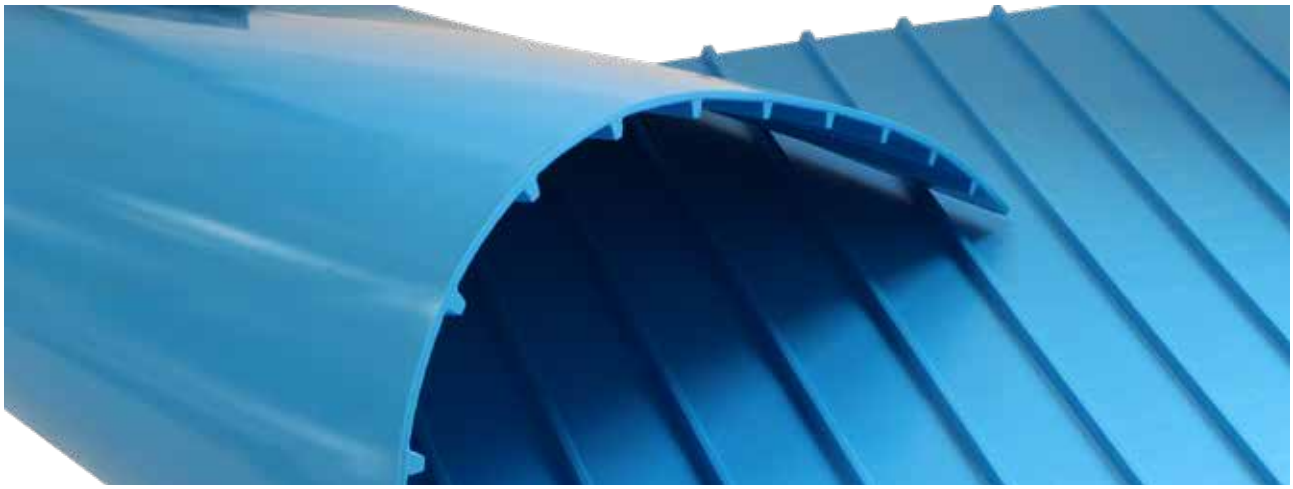

ELAClean® material features

- Several non-porous surfaces prevent bacteria build-up resulting in a maximum product shelf-life
- No plies, edge fraying or modular components or hinges than can break apart and find their way into your final product
- Minimize absorption of water, oils or chemicals
- Not absorbent of smells
- Not absorbent of dust
- Wide operating temperature range
- FDA equipment acceptance
- In compliance with declaration of conformity for the food contact regulations
- Hydrolysis resistant specific for water consumption application

FDA EU — FDA/EU conformity for structured and smooth surfaces

UV — Protection against UV-C waves generated by respective disinfection devices

Hydrolysis resistance, for optimal performances in warm, wet and humid environment

Microbial resistant material

(For declarations of conformity for food contact, see our website or contact our team)

ELAClean® mechanical features

- Eliminates modular components that require extensive cleaning
- Greatly reduces noise levels when compared to modular belting
- Integrated teeth prevent slippage of the belt
- No or little belt pretension needed, avoiding elongation and increasing belt life
- Teeth are an integral part of the belt, eliminating breakages at weak points
- Easy to install and forms a strong base for quality heat welded and HF welded fabrications
- Lightweight conveyor belt, cutting back on motor energy usage
- Easy and fast cleaning and sanitizing of belts
- Saving water and time costs
- Cleaning and sanitizing in motion possible

ELAClean® advantages

- 40% less surface area to clean than plastic modular belting
- Appropriate for clean in place (CIP) cleaning protocol
- Significant cleaning water savings, cleaning labor savings and wastewater reduction
- Half the cleaning time of plastic modular belting
- 30% lighter than plastic modular belting (consequently less energy used and easier on motor bearings)

ELAClean® application fields

- Meat and Poultry
- Fish and Seafood
- Vegetable processing
- Bakery and Confectionery
- Dairy
- Fruits
- Candy

ELAClean® belt can be friction driven for the flat version and, due to the **Elatech®** long experience in timing belt manufacturing, positive driven for the toothed configuration.

1.1. ELAClean® BELTS

1.1.1 ECW-P1N POSITIVE BELTS

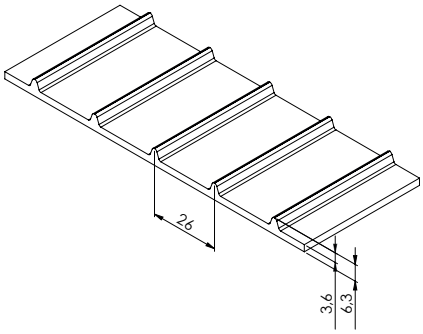

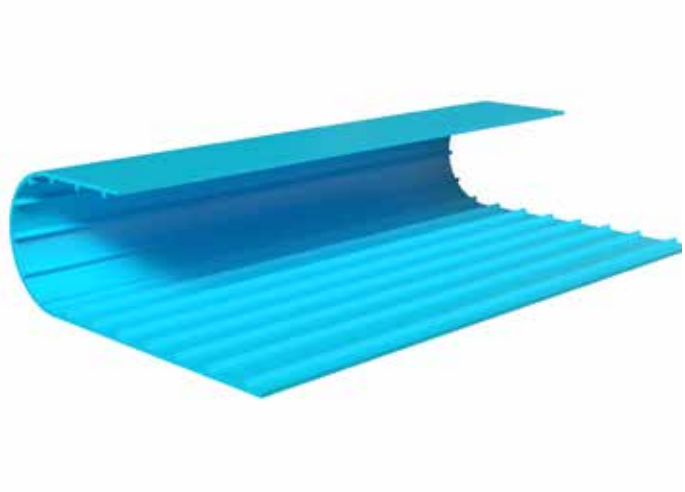

Width tolerance:	*+10 - 3 mm*
Length tolerance:	*± 1%*
Pitch tolerance:	*± 0,4 mm*

Belt Characteristics

- Polyurethane 95 Sh.A Food approved
- Available in Sky-Blue colour as standard
- Available width 1800mm and 60m long roll, as standard
- Widely used to convey small product

Nominal belt pull capacity Newton per mm of width	1,5 N/mm
Working temperature	-30 / +80 °C
Min sprocket diameter (above 0°C)	Z6
Min sprocket diameter (below 0°C)	Z10
Min back bending (above 0°C)	90 mm
Min back bending (below 0°C)	125 mm
Weight	3,8 kg/m2
Friction coefficient against stainless steel	0,5
Friction coefficient against UHMW	0,3

1.1.2 ECW-P2N POSITIVE BELTS

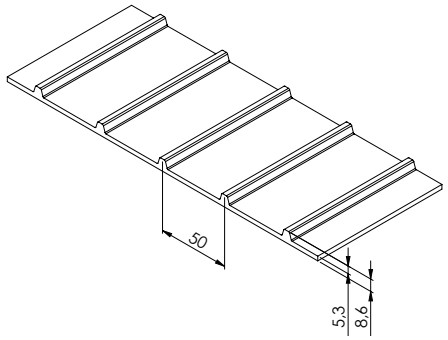

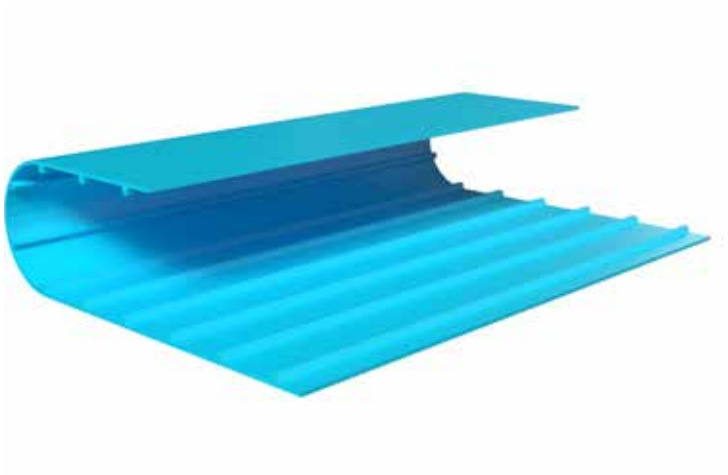

Width tolerance:	*+10 - 6 mm*
Length tolerance:	*± 1%*
Pitch tolerance:	*± 0,4 mm*

Belt Characteristics

- Polyurethane 95 Sh.A Food approved
- Available in Sky-Blue colour as standard
- Available width 1800mm and 60m long roll, as standard
- Widely used to convey heavy load product

Nominal belt pull capacity Newton per mm of width	3,3 N/mm
Working temperature	-30 / +80 °C
Min sprocket diameter (above 0°C)	Z6
Min sprocket diameter (below 0°C)	Z10
Min back bending (above 0°C)	150mm
Min back bending (below 0°C)	250mm
Weight	4,7 kg/m2
Friction coefficient against stainless steel	0,5
Friction coefficient against UHMW	0,3

1.1. ELAClean® BELTS

1.1.3 ECW-C4N SELF CENTERING POSITIVE BELTS

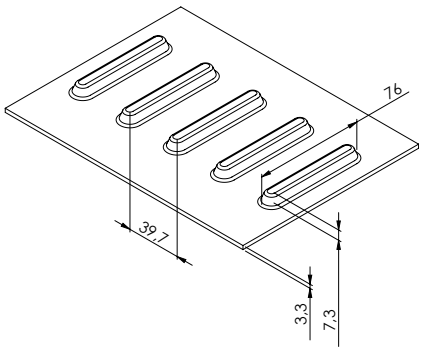

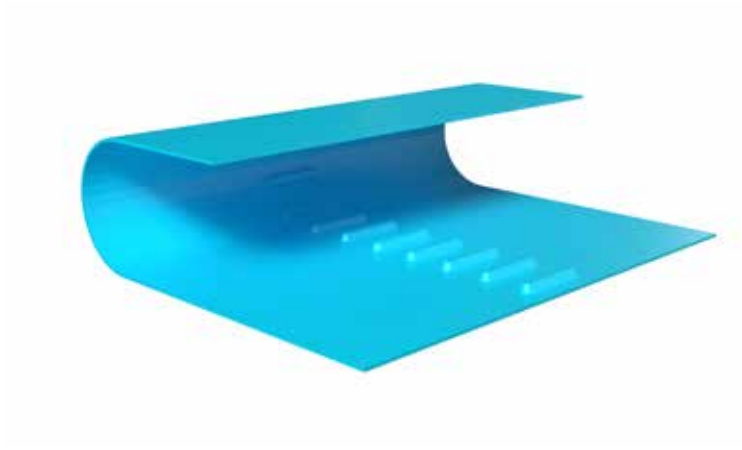

Width tolerance:	*+10 - 6 mm*
Length tolerance:	*± 1%*
Pitch tolerance:	*± 0,4 mm*

Belt Characteristics

- Polyurethane 95 Sh.A Food approved
- Available in Sky-Blue colour as standard
- Available **1 center lug row** on belts up to 1140 mm widths and 60 m long roll
- Available **2 center lug rows** spaced 610 mm on wider belts width 1524 mm (60") and 60 m long roll
- Reduces noise levels to a minimum
- Easy to install and form a strong base for quality heat welded fabrications
- Lightweight conveyor belt, cutting back on motor energy usage

Nominal belt pull capacity Newton per mm of width	3,0 N/mm
Working temperature	-30 / +80 °C
Min sprocket diameter (above 0°C)	Z8
Min sprocket diameter (below 0°C)	Z10
Min back bending (above 0°C)	150 mm
Min back bending (below 0°C)	250 mm
Weight	4,0 kg/m2
Friction coefficient against stainless steel	0,5
Friction coefficient against UHMW	0,3

1.1. ELAClean® BELTS

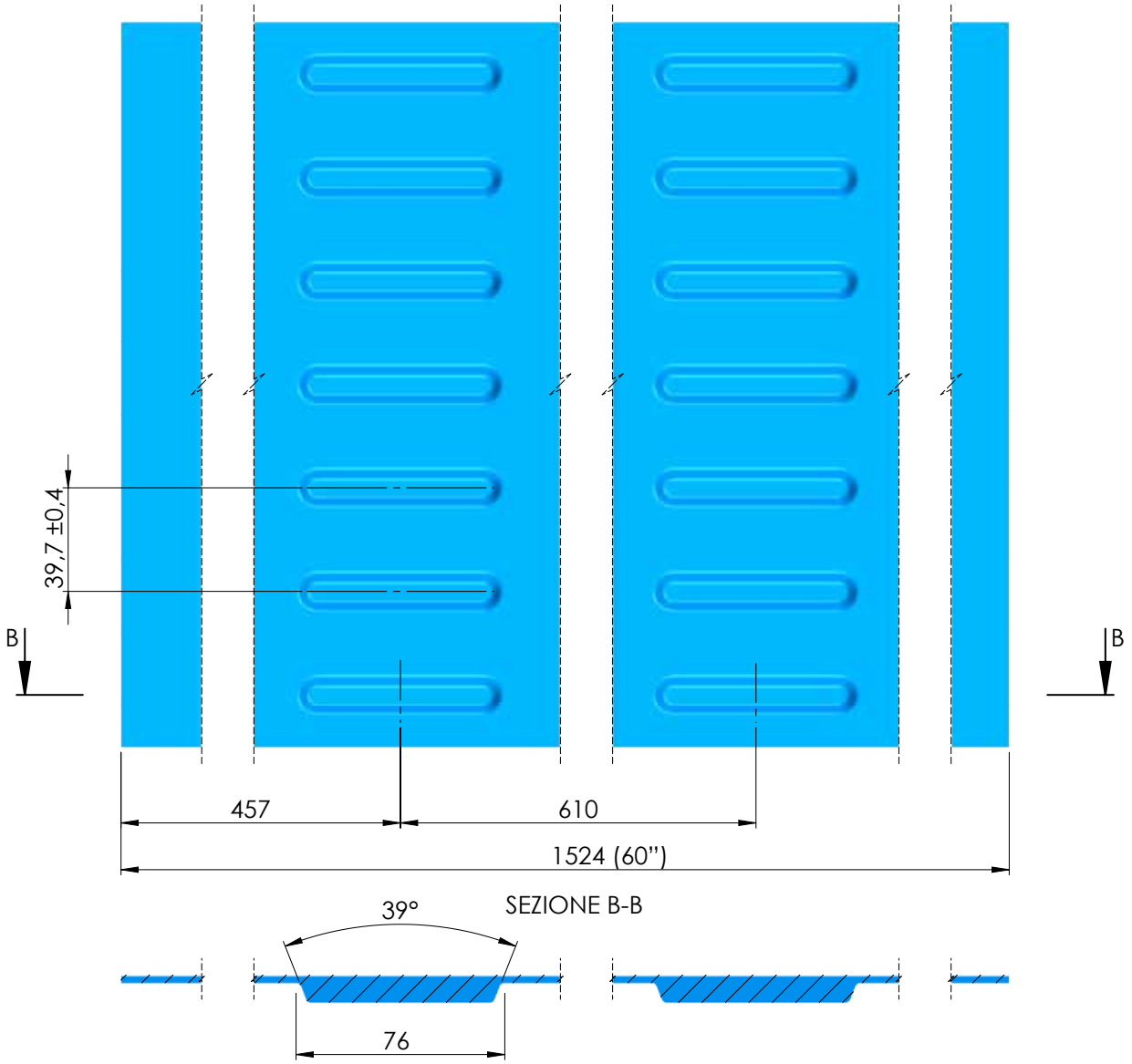

1.1. ELAClean® BELTS

1.1.4 ECW-F3N FLAT BELTS

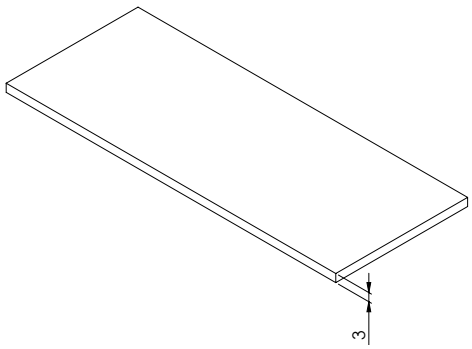

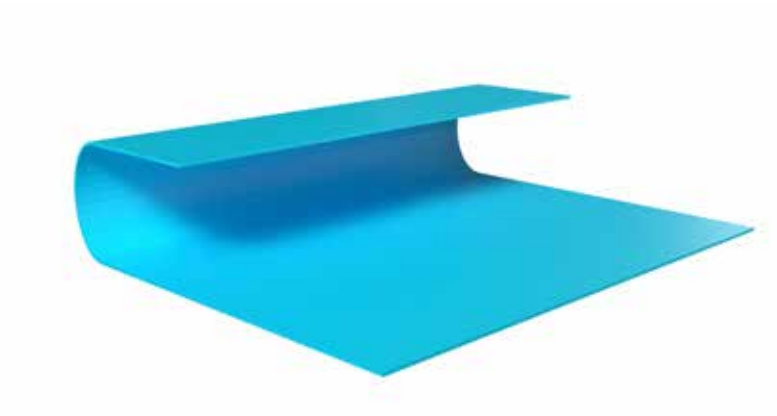

Width tolerance:	*+10 - 3 mm*
Length tolerance:	*±1%*
Thickness tolerance:	*± 0,2 mm*

Belt Characteristics

- Polyurethane 95 Sh.A Food approved
- Available in Sky-Blue colour as standard
- Available width 1800mm and 100m long roll, as standard
- Widely used in friction conveyor system

Allowable tension force @ 1% elongation	3,0 N/mm
Working temperature	-30 / +80 °C
Min roller diameter (above 0°C)	50mm
Min roller diameter (below 0°C)	80 mm
Min back bending (above 0°C)	90 mm
Min back bending (below 0°C)	125 mm
Weight	3,5 kg/m2
Friction coefficient against stainless steel	0,5
Friction coefficient against UHMW	0,3

1.1.5 SURFACE TEXTURE

ELAClean® belts are available as a standard with a "no-cling" structured surface, smooth glossy and matte, which allow an easier cleaning process and easy product release with a significant reduction of time and costs. The belt can be cleaned in place, without the need of removing the belt from the conveyor.

Surface Texture	No-cling	Smooth Matte	Smooth Glossy
1800 mm wide belt	✓	✓	✓

Surface Texture

- **[A] No-cling surface:** excellent release properties, prevent vacuum effect
- **[B] Glossy surface:** good state rip resistance, good product adhesion, suitable for inclined/declined conveying, improve positioning (dry/semi-dry products)
- **[C] Matte surface:** excellent rip resistance, good product release, high speed operations

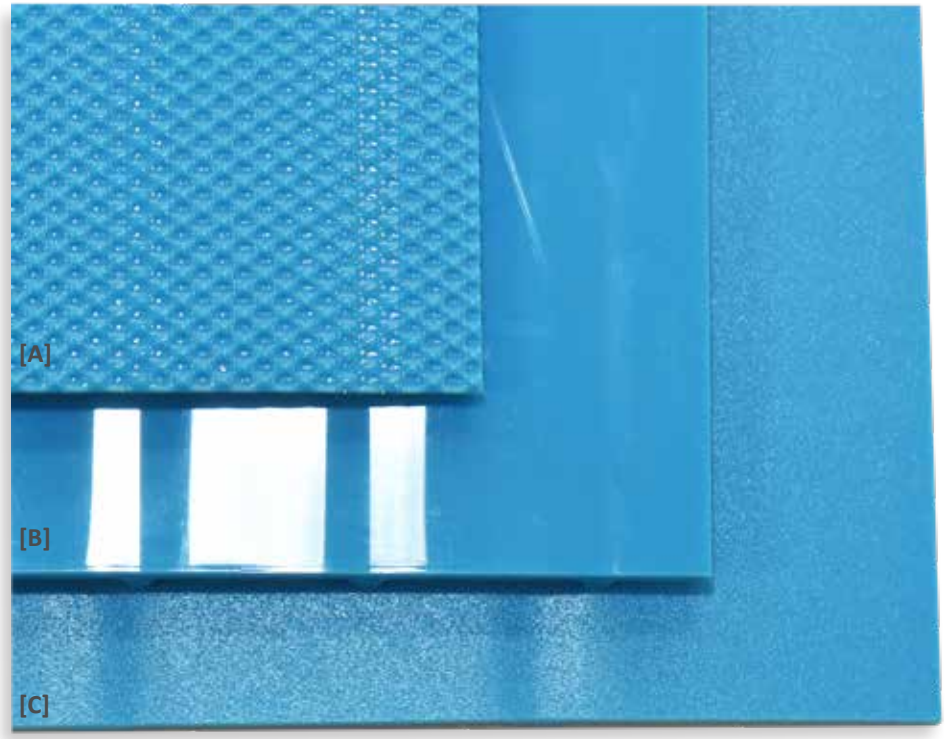

1.2. ACCESSORIES

1.2.1 CLEATS

ELAClean® can be equipped with cleats, also called "profiles" or "flights", in order to move products in a conveyor layout. Different types of cleats are available:

Straight Cleats

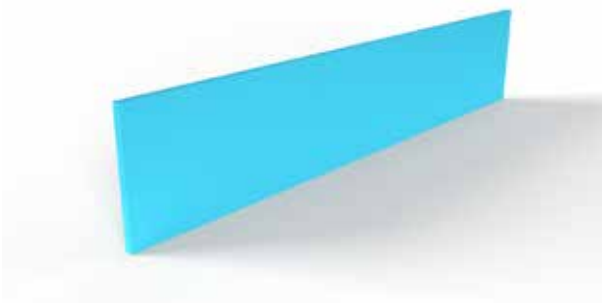

Cleat dimension specific for HF machine tools		
A (Standard height)	[mm]	from 10 up to 150
B (Width)	[mm]	1315 max
C (Thickness)	[mm]	4, 6 and 7 as standard
Material	-	TPU
Hardness	[Sh.A]	95
Colour	-	Sky Blue
Surface texture (option 1)	-	Glossy + Glossy
Surface texture (option 2)	-	No Cling + Glossy
Surface texture (option 3)	-	No Cling + No Cling
Food grade	-	Yes

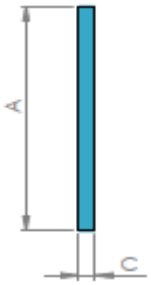

Availability:

Slab availability 4mm, 6mm and 7mm thick, 200mm height, 1200mm long sheet max, flat top surface.
Round top is only under request. Different thickness and surface finishing available under request.

When high hygiene criteria are needed, we recommend that the straight cleats would be welded on the belt surface using HF machine. It can also be welded using hot air gun or by electrode welding, when repair, maintenance is required.

Inclined Cleats

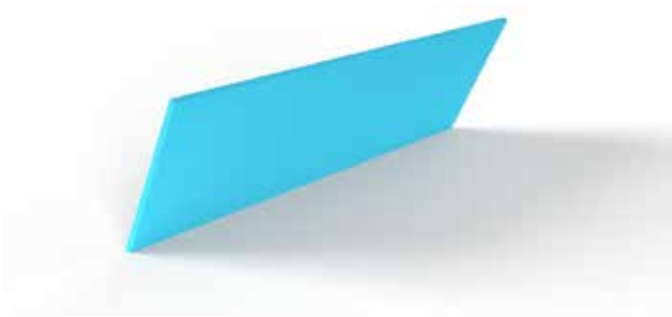

Cleat dimension specific for HF machine tools		
A (Overall height)	[mm]	from 10 up to 150
α (Angle bent)	[°]	65°
D (Width)	[mm]	1315 max
E (Thickness)	[mm]	4,6 or 7mm
Material	-	TPU
Hardness	[Sh. A]	95
Colour	-	Sky Blue
Surface texture (option 1)	-	Glossy + Glossy
Surface texture (option 2)	-	No Cling + Glossy
Surface texture (option 3)	-	No Cling + No Cling
Food grade	-	Yes

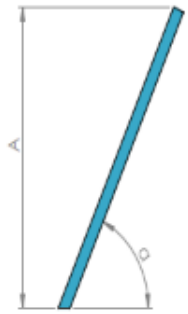

Availability:

Slab availability 4mm, 6mm and 7mm thick, 200mm height, 1200mm long sheet max, flat top surface. Round top surface is only under request. Different thickness and surface available under request.

When high hygiene criteria are needed, we recommend that the inclined cleats would be welded on the belt surface using HF machine. It can also be welded using hot air gun or by electrode welding, when repair and maintenance are required.

1.2. ACCESSORIES

Scoop Cleats

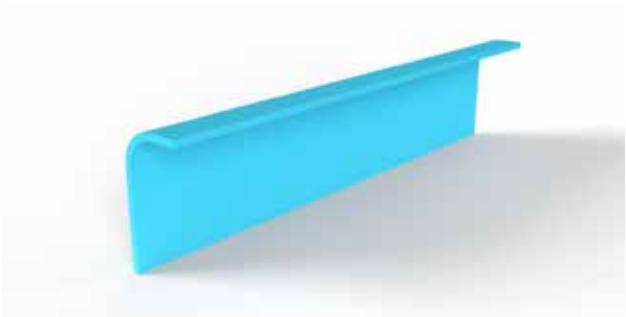

Cleat dimension specific for HF machine tools		
A (Overall height)	[mm]	min 55 - max 150
α (Angle bent)	[°]	90° (±5)
D (Width)	[mm]	900 max
E (Thickness)	[mm]	6 and 7
Material	-	TPU
Hardness	[Sh. A]	95
Colour	-	Sky Blue
Surface texture (option 1)	-	Glossy + Glossy
Surface texture (option 2)	-	No Cling + Glossy
Surface texture (option 3)	-	No Cling + No Cling
Food grade	-	Yes

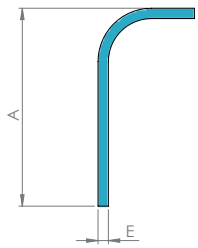

Availability:

Cleat availability 6mm and 7mm thick, 900mm long sheet, flat top surface. Round top surface is only under request. Different thickness and surface finishing available under request.

When high hygiene criteria are needed, we recommend that the bent cleats would be welded on the belt surface using HF machine. It can also be welded using hot air gun or by electrode welding, when repair, maintenance is required.

Recommended maximum cleats height according to sidewall height.

Standard height availability:

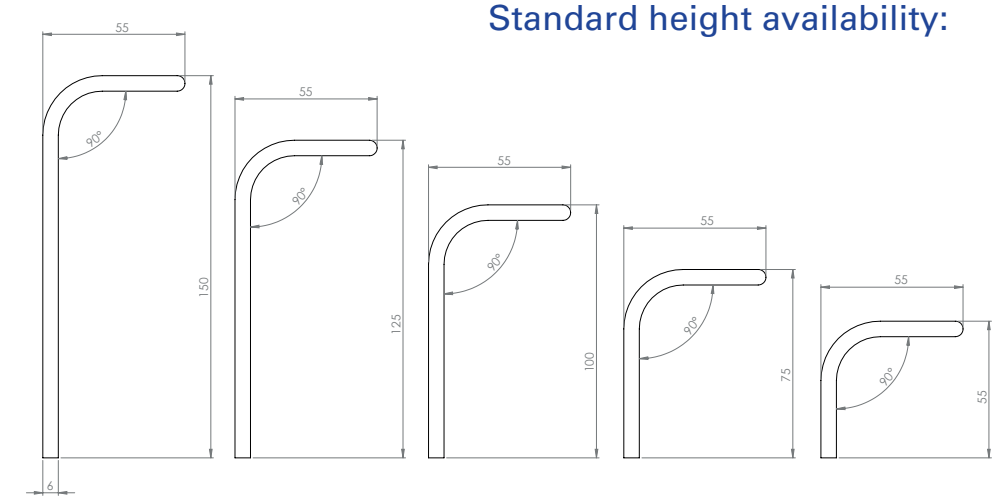

Available also 7mm

Bent Cleats

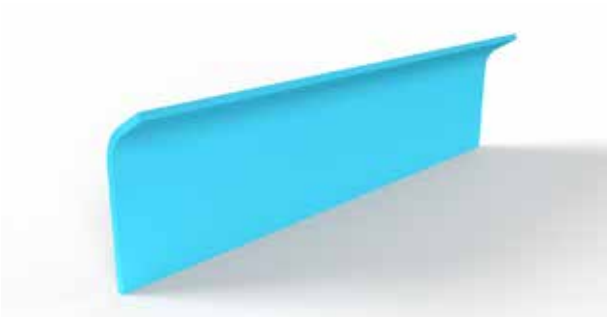

Cleat dimension specific for HF machine tools		
A (Height range)	[mm]	min 75 - max 175
D (Width)	[mm]	900 max
α (Angle bent)	[°]	120° (±5)
E (Thickness)	[mm]	6 and 7
Material	-	TPU
Hardness	[Sh. A]	95
Colour	-	Sky Blue
Surface texture (option 1)	-	Glossy + Glossy
Surface texture (option 2)	-	No Cling + Glossy
Surface texture (option 3)	-	No Cling + No Cling
Food grade	-	Yes

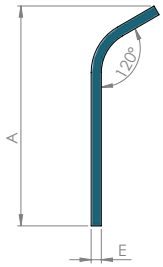

Availability:

Cleat availability 6mm and 7mm thick, 900mm long sheet, flat top surface. Round top surface is only under request. Different thickness and surface finishing available under request.

When high hygiene criteria are needed, we recommend that the bent cleats would be welded on the belt surface using HF machine. It can also be welded using hot air gun or by electrode welding, when repair, maintenance is required.

Recommended maximum cleats height according to sidewall height.

Standard height availability:

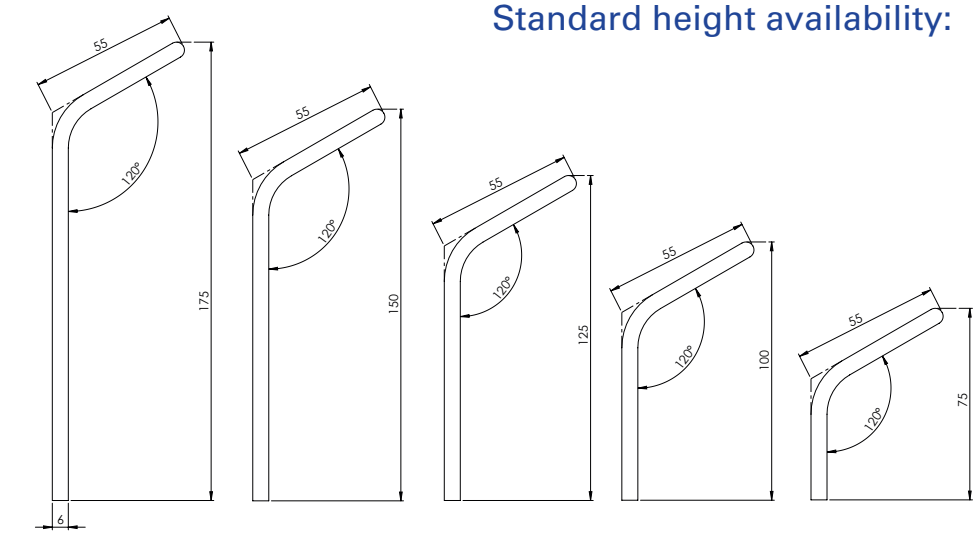

Available also 7mm

1.2. ACCESSORIES

Gusset Cleats

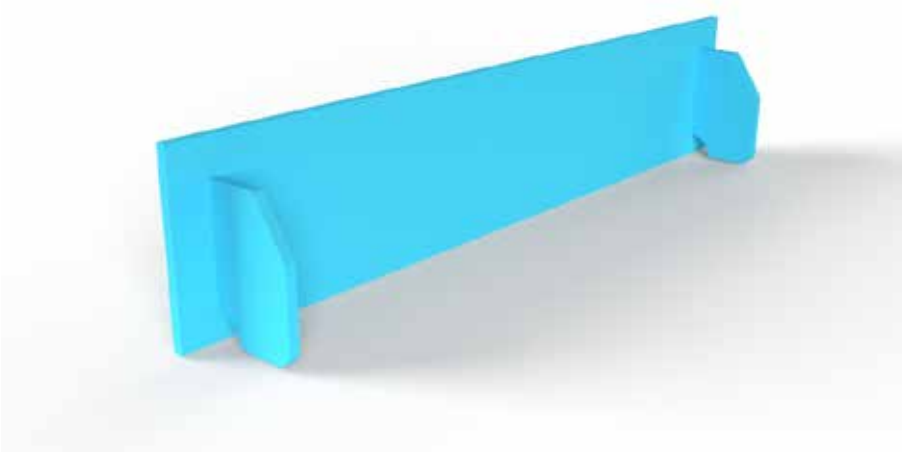

Gusset dimension		
A (Overall height)	[mm]	75 or 120
B (Width)	[mm]	50 or 80
C (Thickness)	[mm]	7
Material	-	TPU
Hardness	[Sh.A]	95
Colour	-	Sky Blue
Surface texture	-	Glossy
Food grade	-	Yes

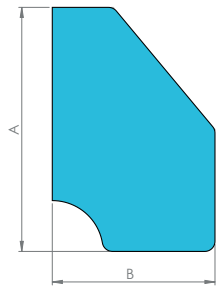

Availability:

Gusset reinforcement 6 or 7mm thick, 75mm or 120mm height as standard.
Gusset can be applied on the cleat surface by using hot air gun or by electrode welding or high frequency welding.

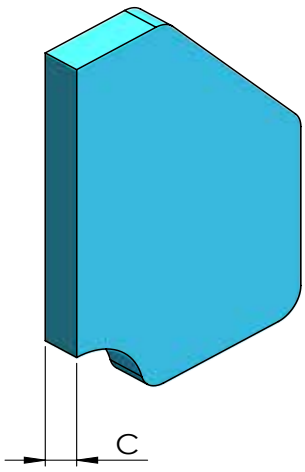

Gusset can be used to reinforce the standard straight cleats and the bend cleats as well for heavy loads conveying application.

1.2.2 SIDEWALLS

Corrugate sidewalls can be applied to any **ELAClean®** belt for better containment of products. They can be used in a wide range of applications in order to contain bulk goods at the sides of conveyor belts. From a let roll of based material, sidewalls can be cut down in height and length as needed according to the application. They can be preformed in the HF machine or by using a hot air gun.

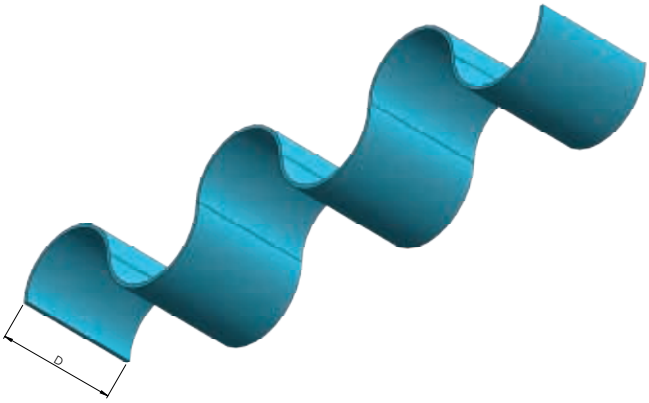

Sidewall dimensions	ECW-S1	ECW-S2	ECW-S3
D (Max height)	200 mm	200 mm	200 mm
Thickness	1.7 (-0,1; -0,3) mm	2 (-0,1; -0,3) mm	2.7 (-0,1; -0,3) mm
Material	TPU	TPU	TPU
Hardness	85 Sh.A	85 Sh.A	85 Sh.A
Colour	Sky Blue	Sky Blue	Sky Blue
Surface texture (option 1)	Glossy - Glossy	Glossy - Glossy	Glossy - Glossy
Surface texture (option 2)	Glossy - Matte	Glossy - Matte	Glossy - Matte
Surface texture (option 3)	-	Glossy - No Cling	Glossy - No Cling
Food grade	Yes	Yes	Yes

Availability:

200m long roll as standard. For other length, thickness or specific requirements, please contact the **ELAClean®** technical department.

Sidewalls are recommended to be welded on the belt surface by using HF machine. Alternatively, the sidewalls can be welded by using hot air gun. This last welding procedure can be used directly in field, where it's not possible to use the HF machine. For the welding procedures, please follow the specific instructions manuals in the annex.

Sidewalls can also be mechanical joined in some specific application, please see the specific instruction manuals.

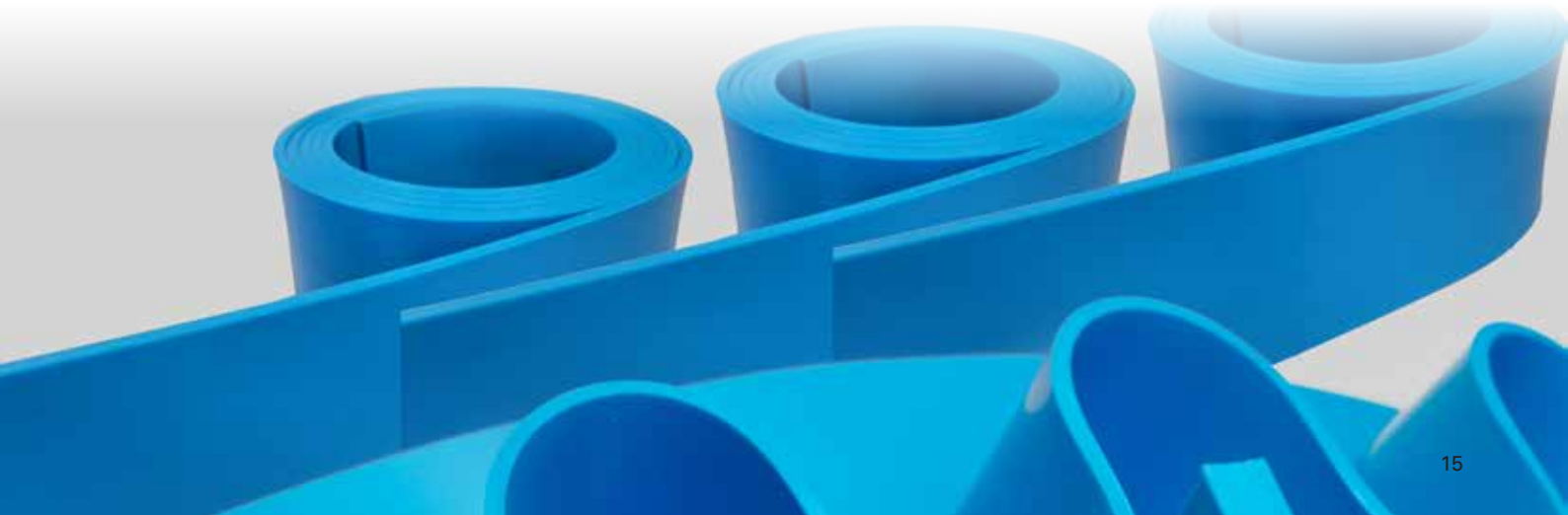

1.2. ACCESSORIES

1.2.3 V-GUIDE

ELAClean® guides are durable and withstand abrasion, oils and general wear and tear as do **ELAClean®** base belt. Guides are generally seen in two different configurations:

- Two parallel guides close to the belt edges or on the underside of the belt.
- Two parallel guides on the top side of the belt used in inclined layouts to maintain belt rigidity and proper guidance.

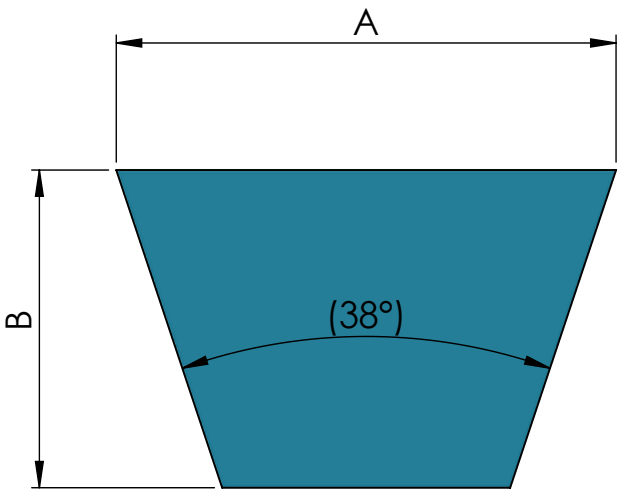

Size	A	B	Hardness	Colour
Metric	[mm]	[mm]	[Sh. A]	-
K6	6	4	85	Sky blue
K10	10	6	85	Sky blue
K13	13	6.5	85	Sky blue
K13	13	8	85	Sky blue
K17	17	11	85	Sky blue

Availability:

30m long rolls as standard (MOQ to be verified). Solid and notched versions are available as standard. Other options available under special request.

All **ELAClean®** guides are welded, eliminating the use of adhesives.
V-guides can be welded, on the belt surface, by using HF machine or by using hot air gun.

1.2.4 SPROCKETS & IDLERS

There are machined sprockets for positive drive belt types with different number of teeth, with square, round and star bore available (for ECW-C4 product line only square bore is available).
Sprockets are available made in UHMW-PE (ultra-high molecular weight polyethylene) and HDPE (high density polyethylene) material and white colour. Available with flanges or without flanges.
Idlers are usually made in HDPE material, white colour as standard.

EC-SM1S Machined Sprockets							
Nº of Teeth	O.D	Width	Bore Size				
			Square		Star	Round	
	(mm)	(mm)	(mm)	(inches)		(mm)	(inches)
6	47.75	25	-	-	NO	25	1
8	64.25	25	-	-	NO	25	1
10	80.74	25	40	1.5	YES	25	1
12	97.23	25	40	1.5	YES	25	1
20	163.21	25	40	1.5	YES	25	1
24	196.19	25	40	1.5	YES	25	1

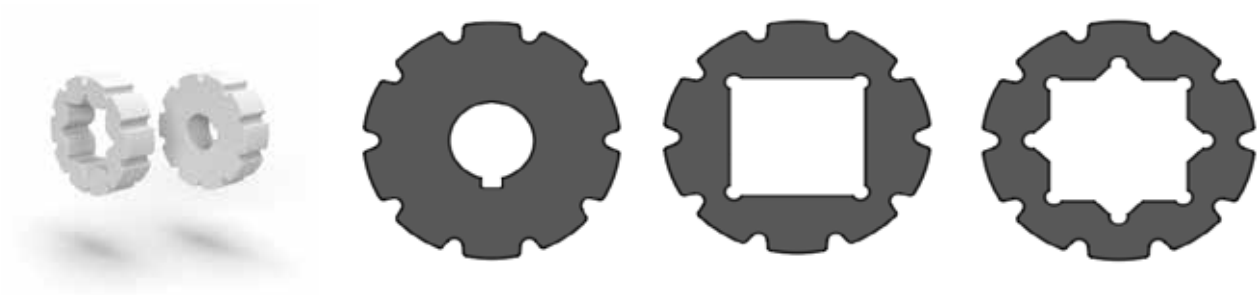

EC-SM1F Machined Idlers [Flanged] - EC-SM1I Machined Idlers [NON Flanged]							
Corresponding Nº of Teeth	O.D	Width	Bore Size				
			Square		Star	Round	
	(mm)	(mm)	(mm)	(inches)		(mm)	(inches)
6	47.75	25	-	-	NO	25	1
8	64.25	25	-	-	NO	25	1
10	80.74	25	40	1.5	YES	25	1
12	97.23	25	40	1.5	YES	25	1
20	163.21	25	40	1.5	YES	25	1
24	196.19	25	40	1.5	YES	25	1

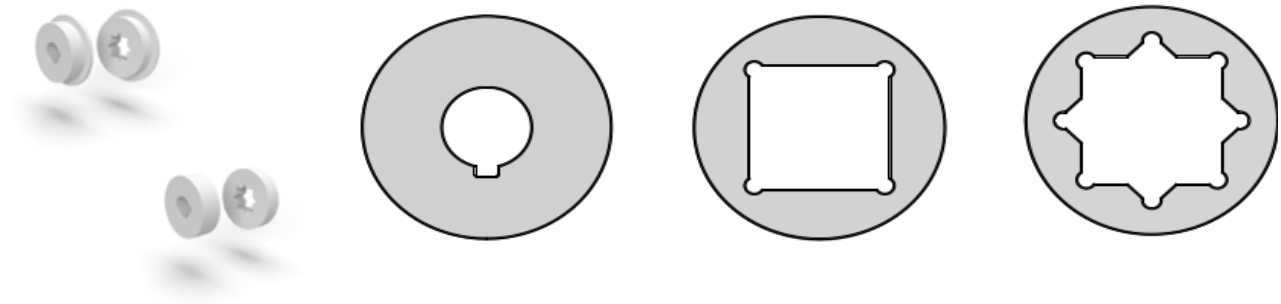

Special material and colour under special request. Please contact **ELAClean®** technical department for the stock availability.

1.2. ACCESSORIES

EC-SM2S Machined Sprockets							
Nº of Teeth	O.D	Width	Bore Size				
			Square		Star	Round	
	(mm)	(mm)	(mm)	(inches)		(mm)	(inches)
6	93.83	30	40	1.5	YES	30	1
8	125.70	30	40	1.5	YES	30	1
10	157.56	30	40	1.5	YES	30	1
			60	2.5	YES	-	-
12	189.41	30	40	1.5	YES	30	1
			60	2.5	YES	-	-
16	253.11	30	40	1.5	YES	30	1

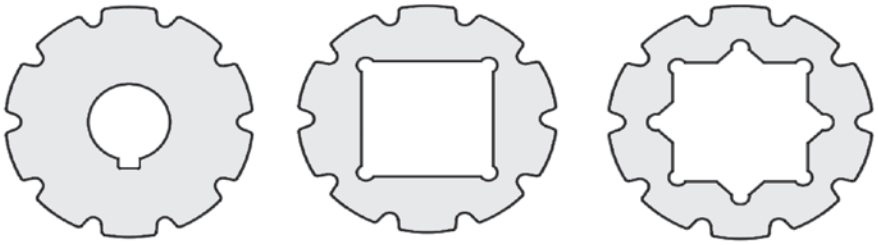

EC-SM2F Machined Idlers [Flanged] - EC-SM2I Machined Idlers [NON Flanged]							
Corresponding Nº of Teeth	O.D	Width	Bore Size				
			Square		Star	Round	
	(mm)	(mm)	(mm)	(inches)		(mm)	(inches)
6	93.83	30	40	1.5	YES	30	1
8	125.70	30	40	1.5	YES	30	1
10	157.56	30	40	1.5	YES	30	1
			60	2.5	YES	-	-
12	189.41	30	40	1.5	YES	30	1
			60	2.5	YES	-	-
16	253.11	30	40	1.5	YES	30	1

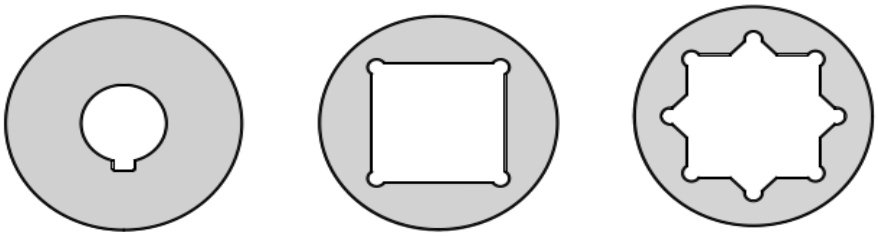

Special material and colour under special request. Please contact **ELAClean®** technical department for the stock availability.

EC-SM4S & EC-SM4C Machined Sprockets							
Nº of Teeth	O.D	Width	Bore Size				
			Square		Star	Round	
	(mm)	(mm)	(mm)	(inches)		(mm)	(inches)
8	100,50	165	40	1,5	NO	NO	
10	126.40	165	40	1,5			
12	151,40	165	40	1,5			
14	177,10	165	40	1,5			
16	202,90	165	40	1,5			
18	228,60	165	40	1,5			
20	254,30	165	40	1,5			

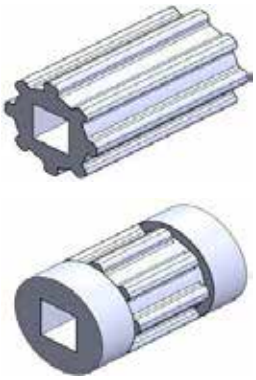

EC-SM4T Machined Idlers							
Corresponding Nº of Teeth	O.D	Width	Bore Size				
			Square		Star	Round	
	(mm)	(mm)	(mm)	(inches)		(mm)	(inches)
8	100,50	165	40	1,5	NO	NO	
10	126.40	165	40	1,5			
12	151,40	165	40	1,5			
14	177,10	165	40	1,5			
16	202,90	165	40	1,5			
18	228,60	165	40	1,5			
20	254,30	165	40	1,5			

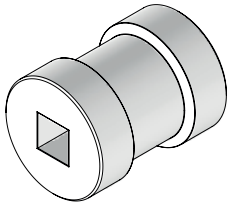

EC-SM4L (50mm) - ECSM4N (100mm) Machined Support Rollers						
Corresponding Nº of Teeth	O.D	Width	Bore Size			
			Square		Star	Round
	(mm)	(mm)	(mm)	(inches)		(mm)
8	100,50	50 100	40	1,5	NO	NO
10	126.40	50 100	40	1,5		
12	151,40	50 100	40	1,5		
14	177,10	50 100	40	1,5		
16	202,90	50 100	40	1,5		
18	228,60	50 100	40	1,5		
20	254,30	50 100	40	1,5		

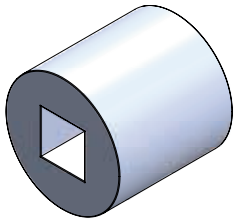

Special material and colour under special request. Please contact **ELAClean®** technical department for the stock availability.

It's also available the sprocket full toothed width with or without flanges, only under special request.

1.2. ACCESSORIES

1.2.5 RETURN ROLLERS

Return rollers can be used on the carryway side or on the slack side to support the belt (on the slack side only if an **ELAClean®** positive drive belt is installed, remember that **ELAClean®** flat belt has to work only under tension).Return rollers are, as standard, made in HDPE (high density polyethylene) material and white colour. Available with flanges or without flanges.

EC-RRM - FR Machined Return Rollers				
Flanges	O.D (mm)	Width (mm)	Bore Size ROUND	
			(mm)	(inches)
YES	100,0	30	20	0,75
			25	1

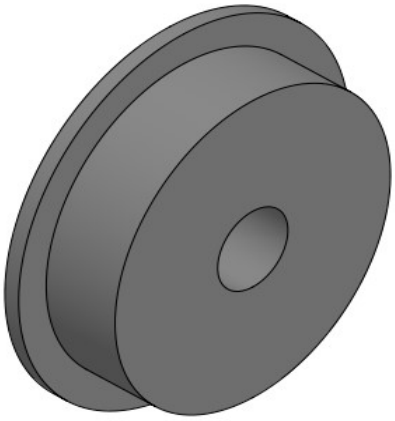

EC-RRM - RR Machined Return Rollers				
Flanges	O.D (mm)	Width (mm)	Bore Size ROUND	
			(mm)	(inches)
NO	100,0	30	20	0,75
			25	1

Under special request it is possible to have support rollers full width.

1.2.6 RETAINING RINGS

Retainer rings can be used for axial fixation of sprockets and idlers. The design supports easy installation from both side of the belt, no shaft turning thanks to the screw fixing. There are several moulded retainer rings, with round, square made in PA.

Material: PA
Colour: Sky blue
Food grade: Yes

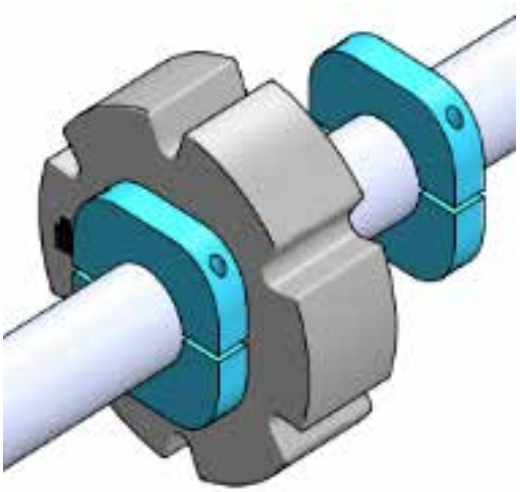

NS-CLAMP Retaining Rings			
D	**A (mm)**	**B (mm)**	**C (mm)**
SQ40	60	67.5	16.00
SQ60	84	100.5	16.00
SQ1"	45	51	14.00
SQ2.5"	88	99	16.00
Ø20	37	39.0	14.00
Ø25	43	44.0	14.00
Ø30	48	50.0	14.00
Ø1"	43	44.0	14.00

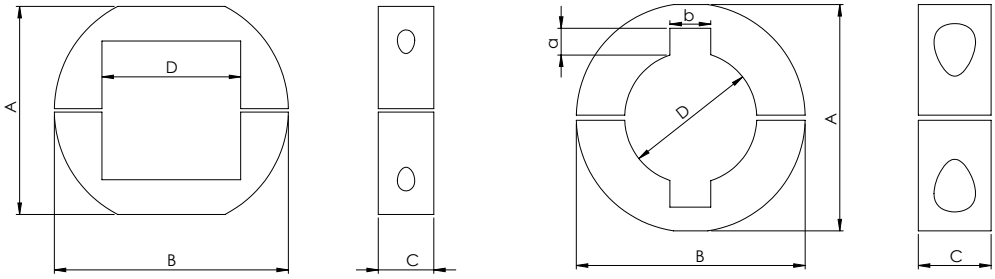

1.2. ACCESSORIES

1.2.7 ADAPTORS

When retrofitting existing conveyor, adaptor from round shaft to square bore (and viceversa) accessories can be necessary. They are usually made in UHMW-PE.

EC-AM Adaptor							
Outside	Nominal O.D	Width	Bore Size				
			Square		Star	Round	
	(mm)	(mm)	(mm)	(inches)		(mm)	(inches)
SQ40	40.0	60	-	-	NO	25	1
			-	-	NO	30	-
SQ1.5"	38.1	60	-	-	NO	25	1
			-	-	NO	30	-

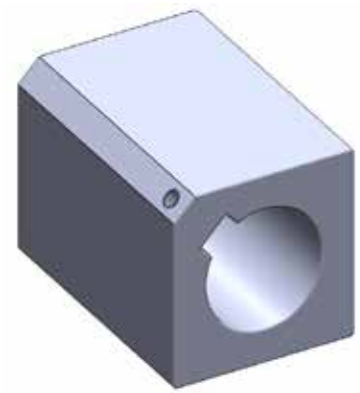

1.2.8 SCRAPERS

Scrapers can be used to remove any food residues and processing scraps from the surface of the belt, ensuring maximum cleanliness and hygiene of the conveyor belt all times of processing. They are usually installed on the slack side of the belt under the drive sprocket in all the application where there is product accumulation.

Scrapers are manufactured with the coextrusion of 2 TPU-based thermoplastic polymers, the rigid body is designed to be drilled and applied to the supporting structure of the conveyor belt through the use of steel screws.
The plasticized tip of the profile is made with a thermoplastic TPU with the addition of a detectable metal polymer. The flexible tip of the profile ends with a sharp edge to ensure the removal of even the smallest debris without affecting the surface of the belt. The softness of the tip also ensures maximum adherence even to any surface irregularities.
The flexible part of the profile is made with a particular compound based on detectable TPU Metal and detectable x-ray.

TPU FOOD-GRADE, NON-TOXIC, METAL DETECTABLE.

- Material: PU soft tip or hard tip available
- Food grade: Yes
- Metal/x-ray metal detectable: Yes
- Standard length: 2000mm

For other versions please contact **ELAClean®** technical department

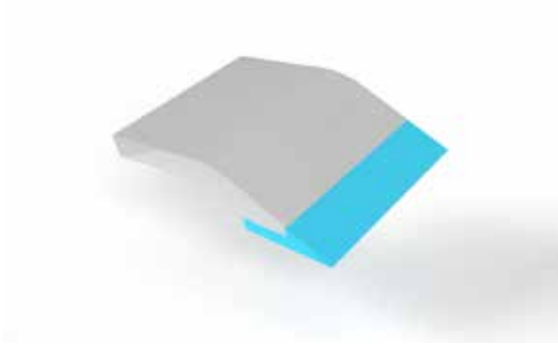

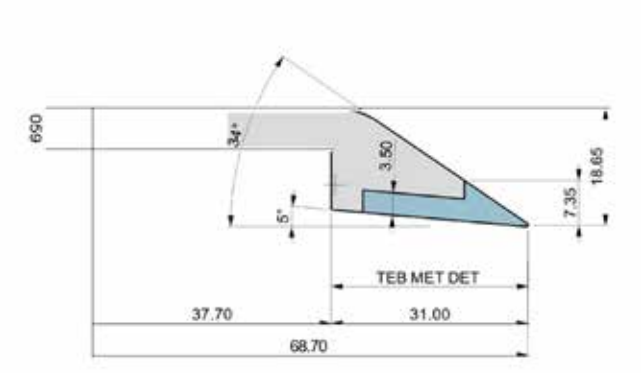

ITEM	Size	Material	Body Color	Color	Tip Hardness	Bar length (mm)
EC-BH02000W	69X19	TPU	PURE WHITE	BLU FOOD	90 ShA	2000
EC-BS02000W	69X19	TPU	PURE WHITE	SKY BLU	75 ShA	2000

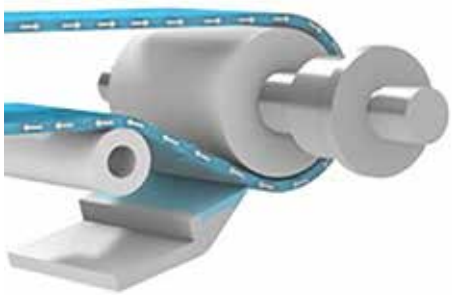

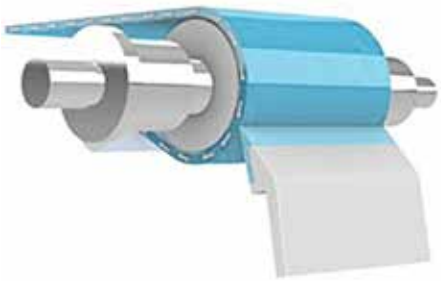

1.2. ACCESSORIES

1.2.9 FASTENERS

Mechanical fasteners, such as plastic and metal staples (also called standard conveyor fasteners) are available when quick assembly/disassembly is required. Before installing mechanical fasteners, belt ends have to be cut properly to ensure the correct sprocket engagement without loosing the pitch.
This joining procedure allows fast and tool-free belt installation/replacement/maintenance for any application, with light and heavy load applied.
Regarding the hygienic aspects, of course an endless spliced belt is recommended by **Elatech®**, in this case we don't take responsibility for metal lace or mechanical fasteners conforming to hygienic requirements. For further information, please contact **ELAClean®** technical department.

Flexco® Alligator® Plastic Rivet

Flexco® Alligator® Ready Set™ Staple

Sometimes there are possibilities when it may be necessary to splice the **ELAClean®** belt using a mechanical lace; in these cases, it's very important to operate in accordance to the recommendations of the lace manufacturer. The pull force calculations provided by **Elatech®** are not valid when mechanical fasteners are used to join the belt (For further information, please contact **ELAClean®** technical department).
The pitch of the teeth, especially in the splice area, has to be maintained for the correct engagement on the sprockets. With some lacing products it may be necessary to remove one tooth completely. For these products, it will be necessary to cut each end of the belt according to the fastener's properties. After applying the lace, the belt will have a gap of one tooth. The loss of one tooth will not affect the operation of the belt, we don't recommend to do this procedure when this method when sprocket's diameter is Ø150mm or less.
For further splicing instructions refer to instruction manual.

1.2.10 SIDEWALL MECHANICAL FASTENERS

When **ELAClean®** belt with a mechanical joint required a corrugate sidewall, it's recommended to use a mechanical junction also for it (see picture below). As alternative an hot air gun can be used.

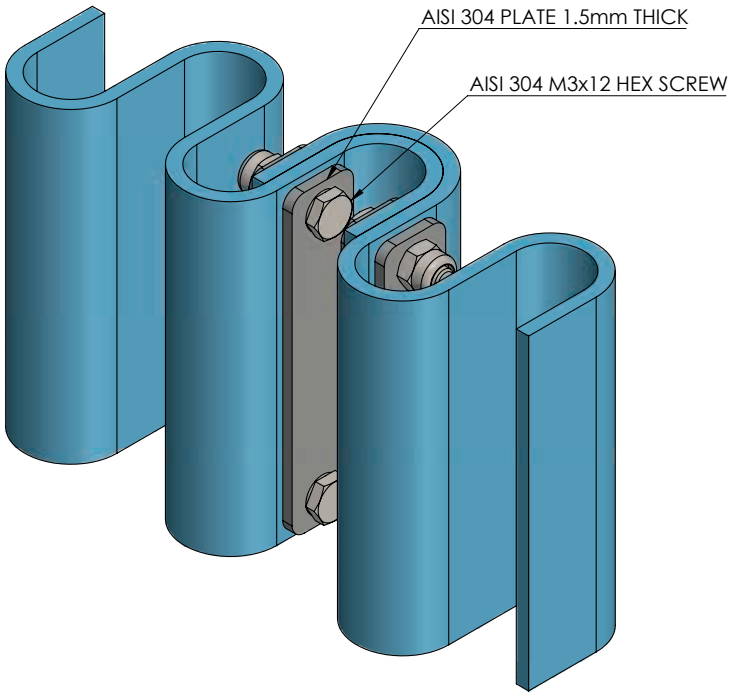

Metal plate availability (on stock):		
H (mm)	L (mm)	D (mm)
150	145	130
100	95	80
75	70	55
50	45	30

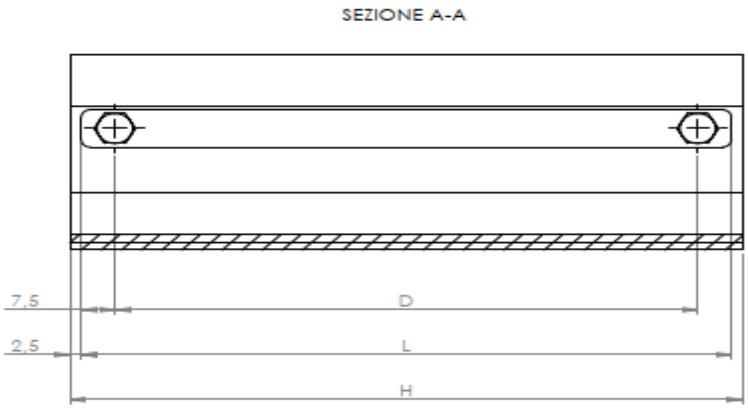

1.3 BELT SPLICING

SPLICING METHODOLOGIES

There are different alternative welding possibilities for **ELAClean®** thermoplastic belts:

- Butt splicing
- Finger splicing
- Overlap splicing
- Rod welding

Due to the high hygienic requirements in the food industry, **ELAClean®** technical department strongly recommends the butt splicing methodology, it offers the best quality in terms of cleaning and hygienic aspects.
Characteristics of butt splicing:

- Contactless heating: integrated contactless heating allows for controlled melt amount of the belt ends.
- Butt splicing ensures tight pitch tolerance free from pinhole air pockets; keeping belts free from holes that can cause bacteria growth and wearing out prematurely.
- Integrated cutter, safety procedure.
- The belt can be joined in the workshop or directly in the field by using a butt splice, such as the Amigo® press from Flexco.

As an alternative, in some special application, a belt can be mechanical joined by using plastic or mechanical fasteners (Flexco products) which are obviously less hygienic, but in some cases useful thanks to the possibility to “open” the belt whenever is needed and operate safely.

1.3.1 AUTOMATIC BUT SPLICING

This is a splice press for monolithic belts engineered by **Elatech®** for precise butt splicing. Splices in thermoplastic TPU belting must ensure tight pitch tolerance and be free from air pockets (or bubbles). Everything regarding the press has been designed to do just that, it's made to do these procedures fast with ease and safety. The toothed templates, for the positive drive belts, have to be customized according to the belt pitch profile in order to secure the belt engagement and keep it in the correct position during the splicing operation. The heating process is contact-less, it splices the belt in less than one minute and guarantees good results in terms of quality and quantity of excess material. To ensure quality splices, air bubbles are avoided through engineered solutions such as the preheat function to remove moisture from the belt. Accuracy, speed, and operator safety are fully integrated into the press, making it an ideal splicing tool also for in-field welding, thanks to the easy storage and transportation.

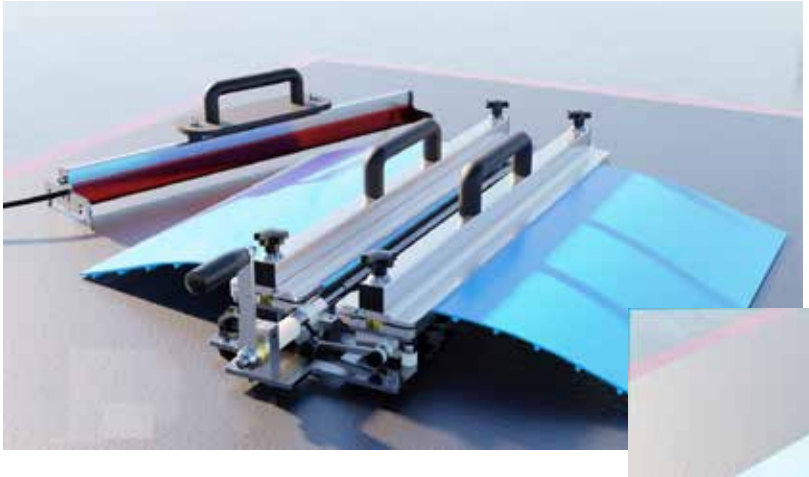

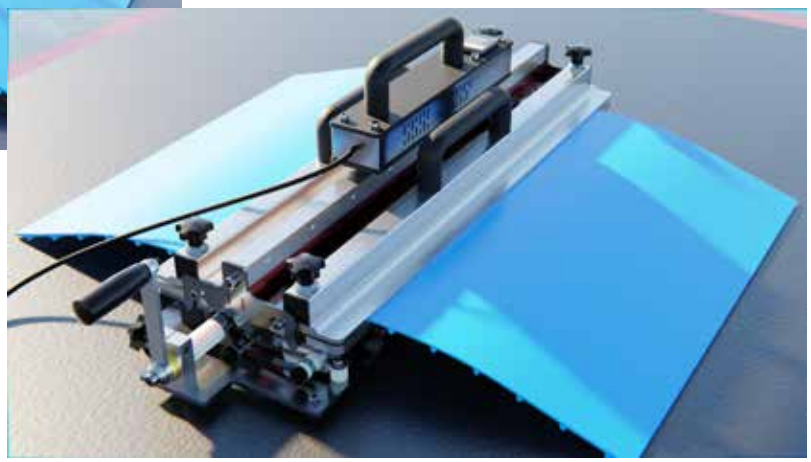

It is designed for operator safety from lacerations as the blade passes through the clamp bars and stores in a blade housing when the operation is completed. The contactless heating element splices the belt in more or less one minute, finishing with a controlled amount of melted material. It is also stored within the press when not in use, protecting the operator from possible burns. The shielded heat zone provides not only consistent heating in various environmental conditions, it also protects the operator from the heat source during splicing operation.

Features and benefits:

- Splice time, including the time to heat the press and splice the belt which is more or less one minute.
- Pre-heat function dries moisture out of the belt ends for improved splice quality, free of air pockets where bacteria can grow.
- Unique heating element brings the belt ends to the desired molten state without damaging the material.
- Exclusive, built-in safety features like the integrated belt cutter and shielded heating elements avoids the need for utility knives and protects operators from the heat source.
- Easy to operate with simple spice settings and digital time control.
- Transport case for easy storage.

1.3 BELT SPLICING

1.3.2 HOT BLADE WELDING (manual butt splicing)

Hot blade welding, with a manual tool, is a reliable method with good quality outcomes.
The welding device is a simple, handly and cost-effective tool for butt splicing either in the company either directly in the field.
The simple operation in combination with the intuitive handling of the tool enables a repeatable and high-quality welded join of the belts.
There are several sources in the market, with optional adapter plates that guarantee precise square positioning and clamping of the belt edges to be welded.

1.4 MECHANICAL FASTENING

Mechanical belt fastening is a joining procedure by using metal/plastic plates.
This join system combines strength and durability with convenience and easy installation directly in field.
Installation methods change from automatic punching machine to the use of hand tools, and the fasteners are available in a variety of metal, plastic, and in some cases, food-grade materials.
Choosing the proper mechanical belt fastening system is one of the most important steps in splicing a belt.

Mechanical fasteners have some advantages in terms of:

- Replacing belts quickly without dismounting machine components
- Repairing belts quickly by inserting a new piece of belt
- Making belts endless quickly and easily

When choosing the type of endless splicing, please consider these following topics:

- Hygienic aspects
- Product conveyed
- Load applied on the belt
- Conveyor design environment condition
- Cleaning methodology

Fasteners availability (our official supplier is Flexco):

- Plastic fasteners
- Metal fasteners

1.4 MECHANICAL FASTENING

1.4.1 FLEXCO PLASTIC FASTENERS

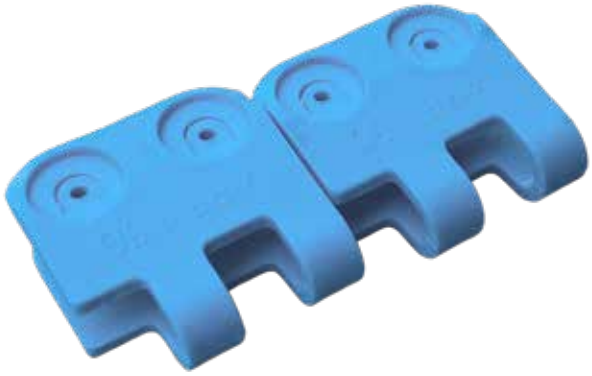

- Design: Hinged (one piece unique)
- Belt thickness covered: 1.6mm to 3.2mm
- Minimum pulley diameter: 75mm
- PIW: 11 kN/m
- Hinge pin size: 3.5mm
- Colours: Blue as standard (other colours under request)
- Material: Nylon

Fastener Size	For Belts with Mechanical Fastener Ratings Up To		Belt Thickness Range		Recommended Minimum Pulley Diameter		Approximate Hinge Pin Diameter	
	P.I.W	kN/m	(in.)	(mm)	(in.)	(mm)	(in.)	(mm)
EC-PAP-100	40	7	Up to 3/32	Up to 2.4	1 - 1/2	38	.096	2.5
EC-PAP-150	65	11	1/16 - 1/18	1.6 - 3.2	3	75	.136	3.5

1.4.2 FLEXCO METALLIC FASTENERS

- Mechanical fastener rating up to 35 kN/m
- Belt thickness covered: from 1.5mm to 6.4mm
- Pulley diameters: from 50mm to 102mm according to the thickness
- Bevelled edges and recessed staple pockets deliver a low-profile splice that is belt component compatible
- Available in steel, stainless steel and magnetic stainless (stainless steel as standard, others versions under special request)
- Quick and easy installation

Fastener Size	Operating Tension Range		Belt Thickness Range		Minimum Pulley Diameter		Approximate Hinge Pin Diameter	
	P.I.W	kN/m	in.	mm	in.	mm	in. (nylon-steel)	mm (nylon-steel)
EC-XRS062	100	17	1/16 - 1/8	1.5 - 3.2	2	50	nylon .080, steel .080	nylon 2.0, steel 2.0
EC-XRS125	160	28	1/8 - 3/16	3.2 - 4.8	3	75	nylon .141, steel .141	nylon 3.6, steel 3.6
EC-XRS167	200	35	3/16 - 1/4	4.8 - 6.4	4	102	nylon .203, steel .187	nylon 5.2, steel 4.7

2. BELT FABRICATION

2.1 CLEATS

2.1.1 STRAIGHT CLEAT

Straight cleat and belt material must be the same, cleat and belt finishing can be different.
Straight cleats can be welded with HF machine (1315mm max width), or they can be directly welded in the field by electrode welding or hot gun.

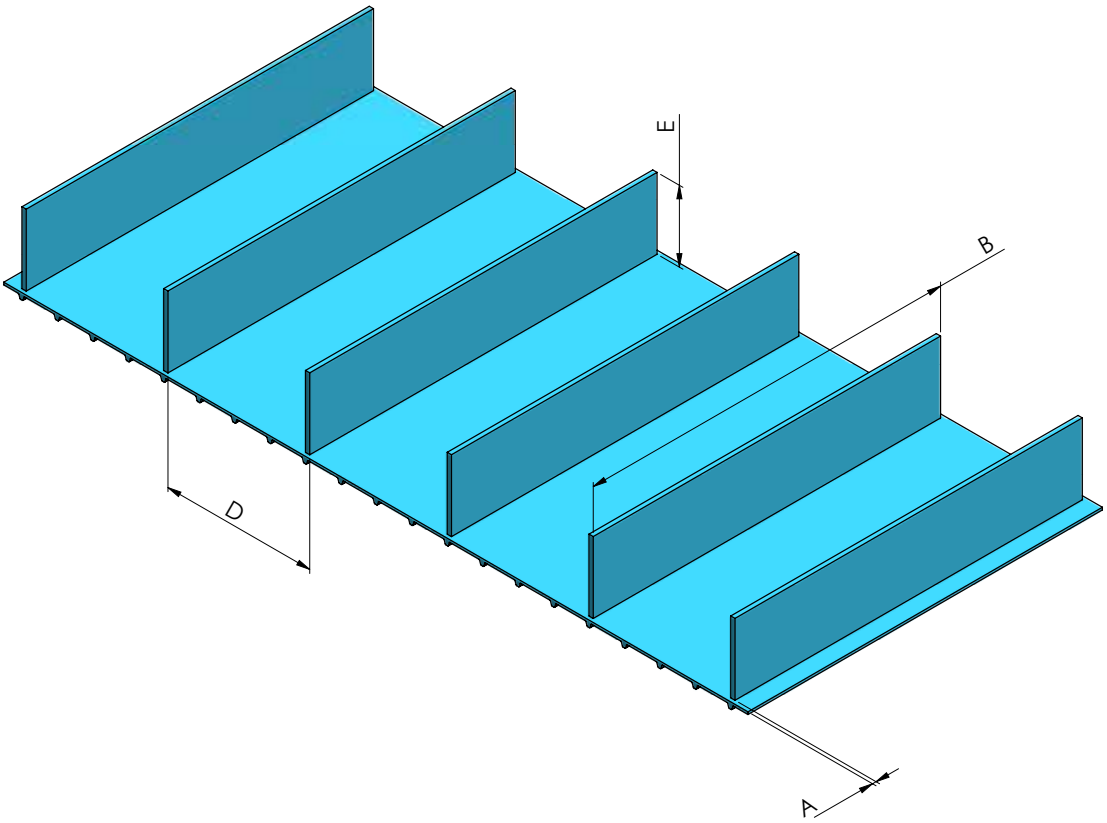

Welding characteristics		
A (Distance from the edge)	[mm]	Depends on the conveyor limitation design
B (Width across the belt)	[mm]	900 max with HF machine
D (Pitch)	[mm]	According to the belt pitch
E (Max height)	[mm]	150 max With the HF machine

Welding methodologies	
High frequency machine	Yes (recommended)
Electrode welding with rods	Yes (in field or repair/maintenance)
Heating by using hot air gun	Yes (in field or repair/maintenance)

2.1.2 INCLINED CLEAT

Inclined cleat and belt material must be the same, cleat and belt styles can be different.
Inclined cleats can be welded with HF machine (1315mm max), or they can be directly welded in the field by electrode welding or hot gun.

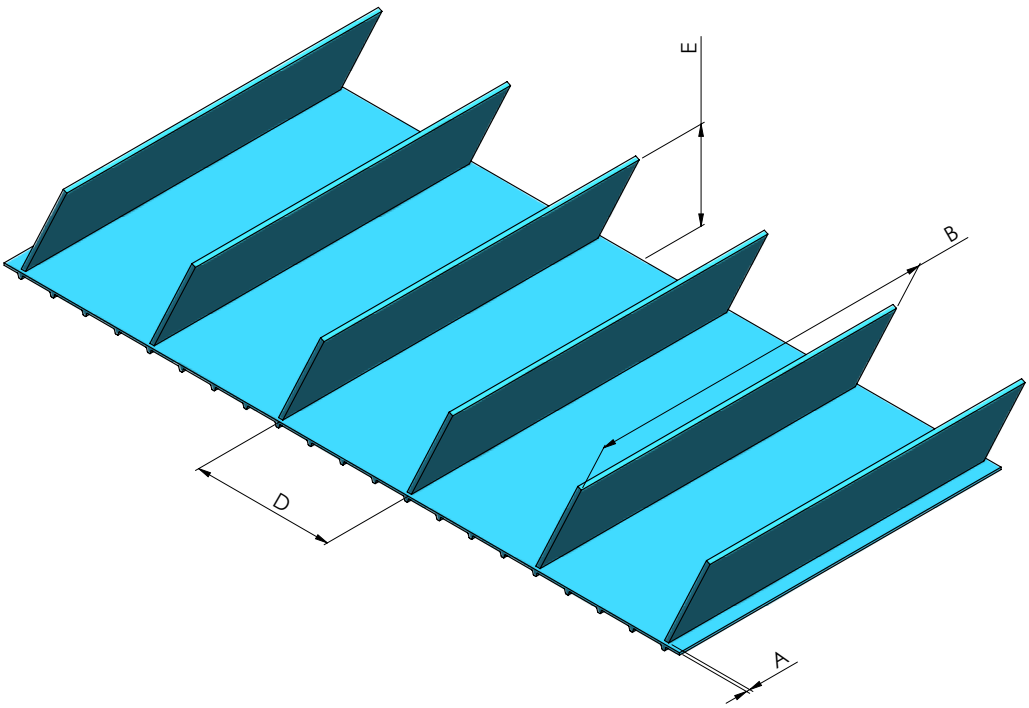

Welding characteristics		
A (Distance from the edge)	[mm]	Depends on the conveyor limitation design
B (Width across the belt)	[mm]	900 max with HF machine
D (Pitch)	[mm]	According to the belt pitch
E (Max height)	[mm]	150 max

Welding methodologies	
High frequency machine	Yes (recommended)
Electrode welding with rods	Yes (in field or repair/maintenance)
Heating by using hot air gun	Yes (in field or repair/maintenance)

2.1.3 BENT & SCOOP CLEAT

Bent (and scoop) cleat and belt material must be the same, cleat and belt styles can be different.
Bent (and scoop) cleats can be welded with HF machine (1315mm max width), or they can be directly welded in the field by electrode welding or hot gun.
Bent cleats angle 120° (±5°) as per below picture; Scoop cleats angle 90° (±5°)

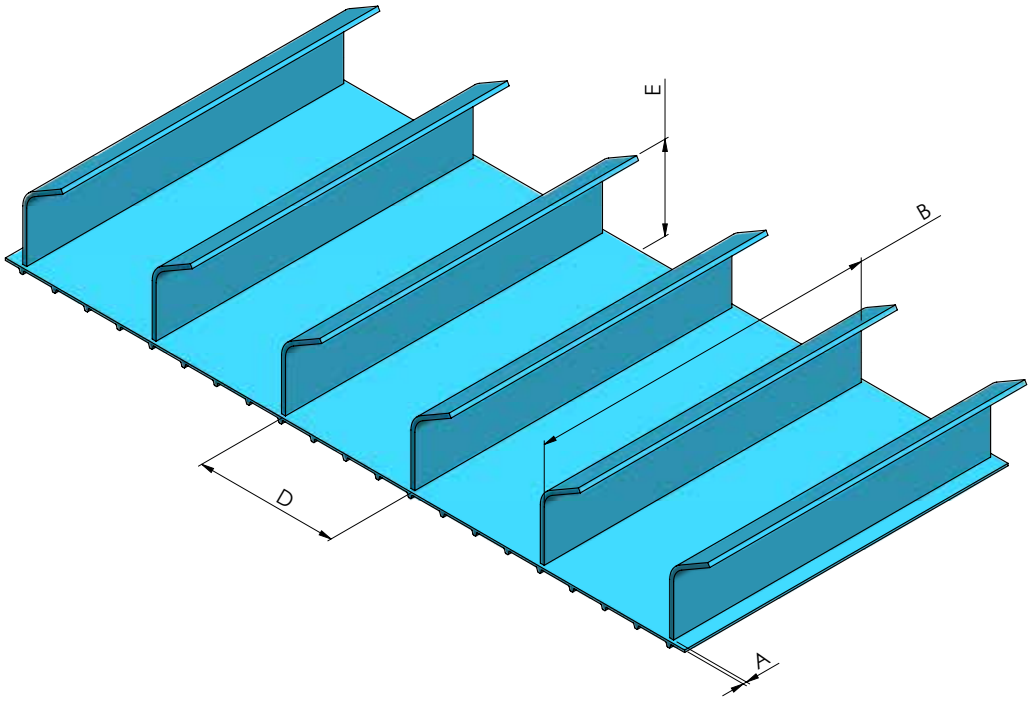

Welding characteristics		
A (Distance from the edge)	[mm]	Depends on the conveyor limitation design
B (Width across the belt)	[mm]	900 max with HF machine
D (Pitch)	[mm]	According to the belt pitch
E (Max height)	[mm]	175 max (bent cleats) - 150 max (scoop cleats)

Welding methodologies	
High frequency machine	Yes (recommended)
Electrode welding with rods	Yes (in field or repair/maintenance)
Heating by using hot air gun	Yes (in field or repair/maintenance)

2.1.4 GUSSETED CLEAT

Gusseted cleat and belt material must be the same, cleat and belt styles can be different
Gusseted cleats can be welded with HF machine, or they can be directly welded in the field by electrode welding.
Gussets increase cleat rigidity and they are often used in heavy load applications.
Please contact **Elatech®** technical department for specific information.

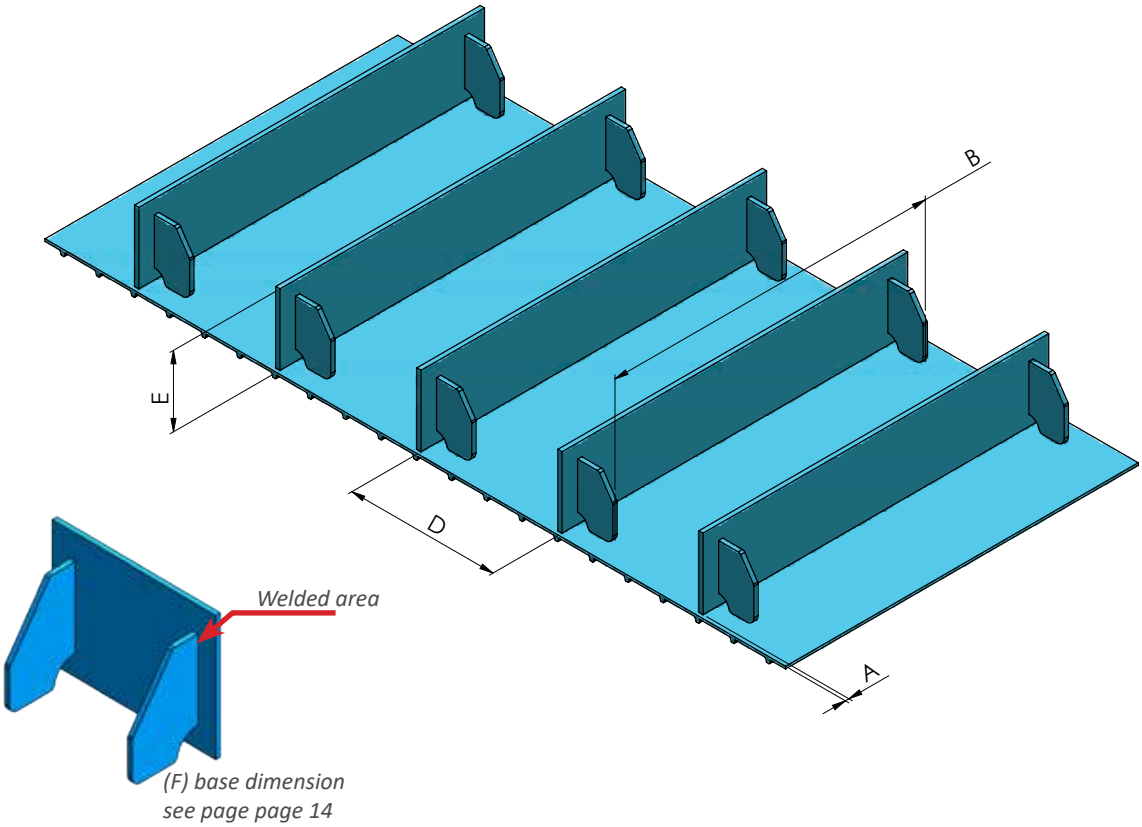

Welding characteristics		
A (Distance from the edge)	[mm]	Depends on the conveyor limitation design
B (Distance between gussets)	[mm]	40 min - 280 max
D (Pitch)	[mm]	According to the belt pitch
E (Max height)	[mm]	150 max

Welding methodologies (Straight cleat on the belt surface)	
High frequency machine	Yes (recommended)
Electrode welding with rods	Yes (in field or repair/maintenance)
Heating by using hot air gun	Yes (in field or repair/maintenance)

Welding methodologies (Gusset on the straight cleat surface)	
High frequency machine	Yes
Electrode welding with rods	Yes
Heating by using hot air gun	Yes

It is important to follow the below procedures:
Fix the straight cleat on the belt surface (high frequency machine is recommended)
Fix the gusset on the cleat surface by using a polyurethane rod with a Leister hot air gun.

2.2 SYNCHRONIZED SIDEWALL

Sidewall material must be the same of cleats and the belt, while hardness and style can be different. They have to be synchronized with the teeth of the belt and with the cleats (except for the flat belt), only for light loads applications the synchronization with the cleats can be different. Sidewalls can be welded with HF machine as we always recommend, but in some applications, it is also possible with a hot air gun (usually directly in the field).

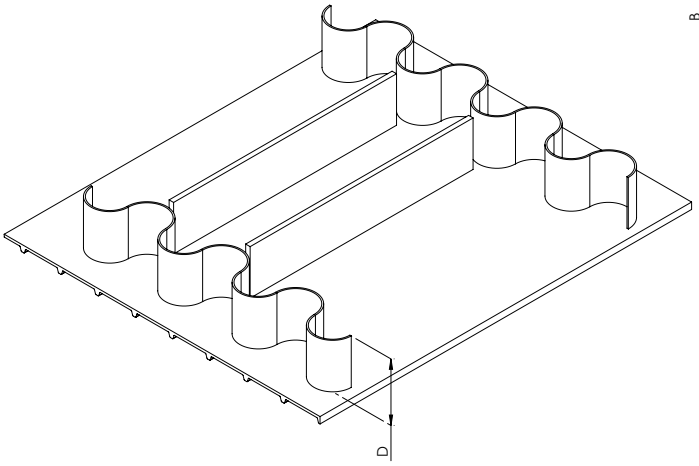

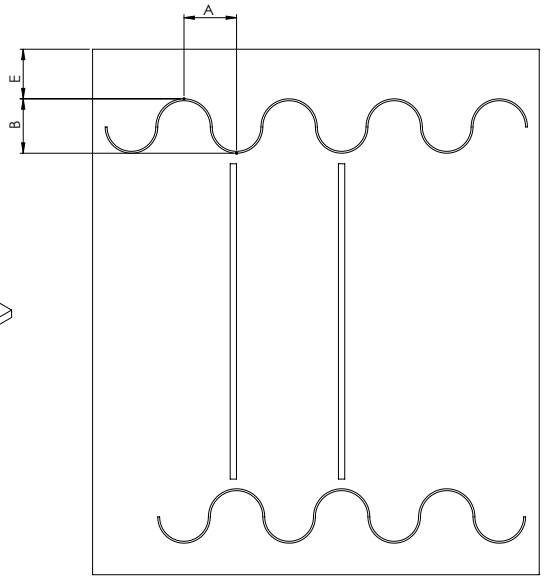

Welding characteristics	EC-P1	EC-P2	EC-C4	EC-F3
A (Sidewall Pitch)	26 mm	50 mm	39,7 mm	26 mm
B (Sidewall Width)	26 mm	45 mm	40 mm	26 mm
D (Sidewall High)	25;30;40;50;60 mm	50;75;100;125;150 mm	50;75;100;125;150 mm	25;30;40;50;60 mm
E (Distance from the edge)	Depends on the application			

Welding methodologies (Straight cleat on the belt surface)	
High frequency machine	Yes (recommended)
Electrode welding with rods	No
Heating by using hot air gun	Yes

2.3 RECOMMENDATIONS

2.3.1 SIDEWALL

EC-P1 - Footless Corrugate Sidewalls						
Sidewall height	[mm]	25	30	40	50	60
Sidewall thickness	[mm]	1,7 - 2				
Wave pitch	[mm]	26				
Minimum pulley diameter (Normal flex)	[mm]	100	100	100	100	110
Minimum pulley diameter (Back flex)	[mm]	110	110	110	110	120

EC-P2 - Footless Corrugate Sidewalls						
Sidewall height	[mm]	50	75	100	125	150
Sidewall thickness	[mm]	1,7 - 2				
Wave pitch	[mm]	50				
Minimum pulley diameter (Normal flex)	[mm]	100	150	195	230	260
Minimum pulley diameter (Back flex)	[mm]	110	200	300	400	450

EC-C4 - Footless Corrugate Sidewalls						
Sidewall height	[mm]	50	75	100	125	150
Sidewall thickness	[mm]	1,7 - 2				
Wave pitch	[mm]	39,7				
Minimum pulley diameter (Normal flex)	[mm]	100	120	150	210	250
Minimum pulley diameter (Back flex)	[mm]	150	190	290	380	450

EC-F3 - Footless Corrugate Sidewalls						
Sidewall height	[mm]	25	30	40	50	60
Sidewall thickness	[mm]	1,7 - 2				
Wave pitch	[mm]	26 or 50				
Minimum pulley diameter (Normal flex)	[mm]	100	100	100	100	110
Minimum pulley diameter (Back flex)	[mm]	110	110	110	110	120

(Additional sidewalls thicknesses available under request)

2.3.2 V-GUIDE (Hardness 85 Sh.A - Colour Sky Blue)

Width [mm]	Height [mm]	Minimum pulley diameter [mm]
6	4	60
10	6	70
13	6,5	100
17	11	150

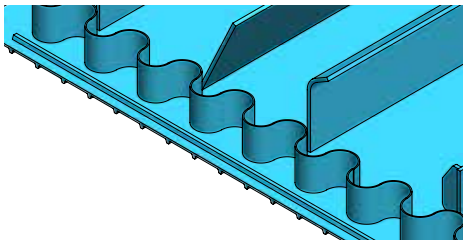

(Other hardness available under request, please contact ELAClean technical department)

2.3.3 CLEAT POSITIONING (Recommendation for the positive drive belts)

Recommendations

- Cleats centre distance should be equal to the pitch of the belt. (1)
- With low loads, in some applications, cleats can be welded in the middle of the teeth pitch. (2)
- Cleats position not allowable. (3-4)

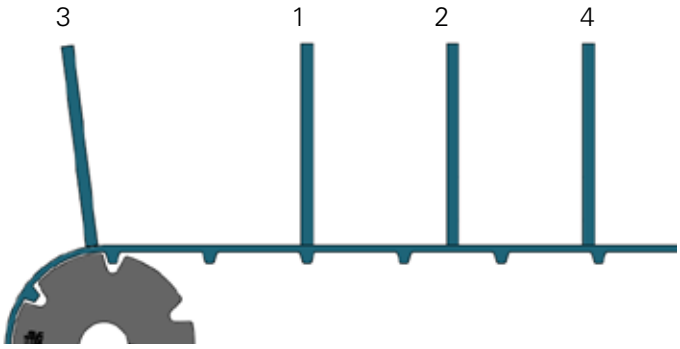

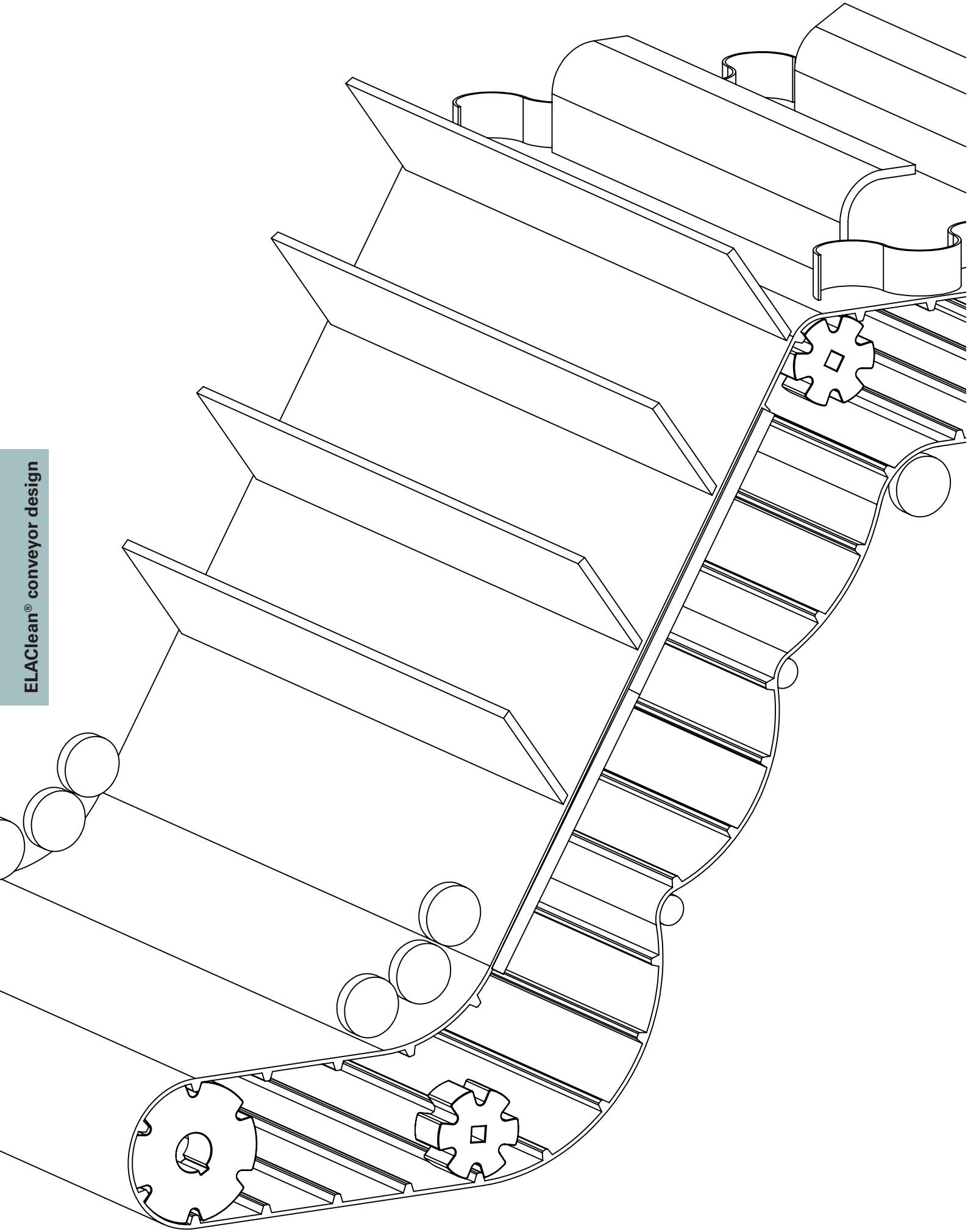

3.1. GENERAL

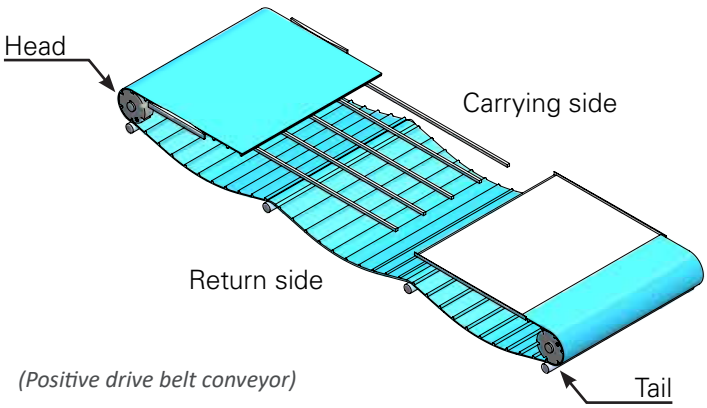

(Positive drive belt conveyor)

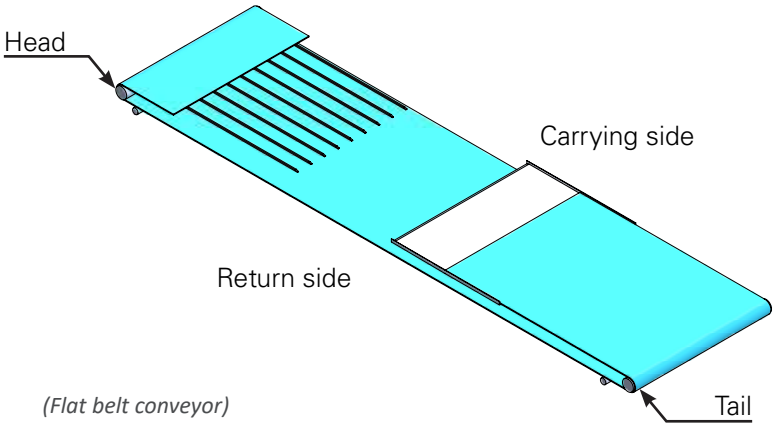

(Flat belt conveyor)

BASIC CONVEYOR FRAME/PARTS - ELAClean® ECW-P1 & ECW-P2

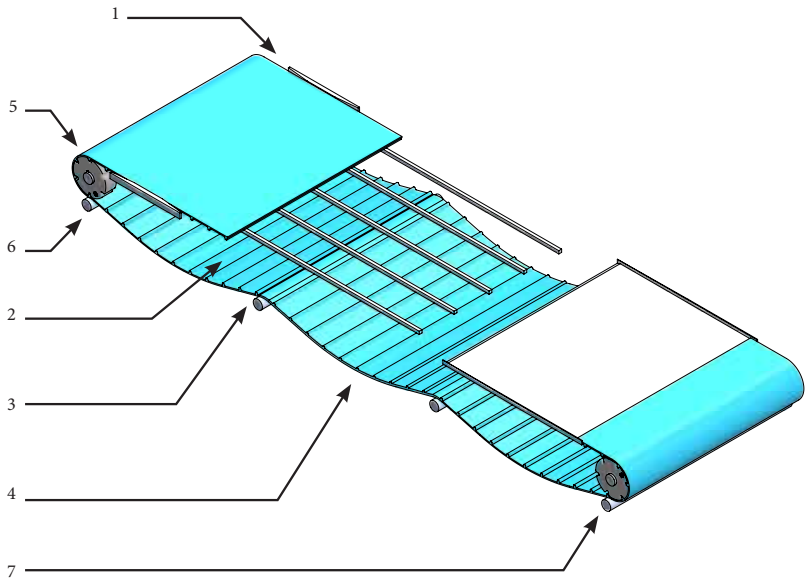

1. Guide rails to guide the belt at the sides
2. Different types of belt support (in this case parallel wearstrips)
3. Return rollers (if necessary, with flanged pulley to guide the sides of the belt)
4. Belt sag (only for positive drive belt)
5. Drive shaft/drum (at the "head" of the conveyor), sprocket for positive drive.
6. Snub roller/pressure roller at the drive pulley
7. Idler shaft/drum (at the "tail" of the conveyor, a sprocket or wheels can be used)

3.1.1 HYGIENIC DESIGN

ELAClean® is usually used in applications where high hygiene standards have to be guaranteed. The system as a whole can only meet these standards according to a proper conveyor design. Where high hygiene standards are required, conveyor systems have to be made according to principles and design to avoid relevant weakness. Dirt, moisture and bacteria must not build up; materials, surfaces and components should be easy to clean.

Therefore, in these cases, keep in mind the following principles:

- Keep the overall design as simple as possible to avoid dirt strips.
- Use as many supports as structurally necessary.
- Avoid using mechanical belt splices whenever possible.
- Avoid using tubes that are not completely sealed. Instead use solid bars wherever possible.
- L and U sections as well as surfaces should be positioned so that liquids reliably run off them.
- For the joining technology, give preference to clean welded joints (flat welded seams in contact with food should be ground flat).
- If bolted connections are unavoidable, don't leave any thread sections exposed; don't use star washers as clamping elements and don't use allen screws. All joint areas should be easy to clean.
- Never design inner radii that are smaller than 3mm.
- Never drill into completely sealed tube sections, not even to create internal threads, e.g. for adjustable feet.
- Design for easy tool-free installation and removal of accessory parts, e.g. belt guides.
- Finish all surfaces which are in direct contact with food in accordance with relevant food hygiene regulations (grind, polish, passivated).
- Use only materials that are easy to clean and resistant to frequent cleaning, and food safe materials where applicable. Note the materials table on the next paragraph.

3.1.2 MATERIALS

All materials used in the conveyor must satisfy hygienic and mechanical requirements, withstand the corresponding operating conditions. Therefore, for the selection and type of materials, it is essential to observe the recommendations in the following table. Also the temperature can affect the belt at the conveyor structure due to the thermal expansion/contraction, keep in mind these aspects during the design process of conveyors

Conveyor components	Materials
Frame	• Aluminium • Steel • Stainless Steel
Sliding support (Parallel, V-shaped or flat plate)	• Ultra-high-molecular-weight-polyethylene (UHMW-PE) • Stainless Steel
Support rollers	• Plastic or metal
Drum	• Steel • Stainless Steel • Lagged rolls
Scraper	• Polyurethane (PU)
Side skirts	• Polyurethane solid (PUR)
Side strips	• Plastic
Sprocket	• Ultra-high-molecular-weight-polyethylene (UHMW-PE) • High density polyethylene (HDPE)
Return rollers	• Full width plastic or metal • Plastic wheels

For further information, please contact **ELAClean®** technical department.

3.2. CONVEYOR CONSTRUCTION

3.2.1 FRAME AND SUPPORTS

The following aspects should be taken into account as conveyors design guidelines:

- For cleaning, maintenance and repair purposes, all parts of the conveyor should be easily accessible. Use simple structures that allow the belt to be lifted up and/or drive/idler rollers to be easily removed (e.g. swing open designs).
- For easy belt installation as well as quick and convenient cleaning, take-ups and/or quick-tensioning devices may also be useful even if the belt is operated without pre-tension.
- Match the conveyor design to the selected belt type. All sprockets diameters, transitions areas etc. should have at least the allowed d_{min} of the belt (for wrap angles ≤ 15° it is recommended $d_{min}/2$). Also note the counter-bending specifications and the space requirements for the cleats and sidewalls.
- If the design makes it difficult to fit endless belts, alternatively, mechanical fasteners can be used if the application permits.
- The spatial conditions at the installation site must allow all planned conveyor functions.
- For all conveyor dimensions, take in consideration the belt elongation and shrinkage that can occur during operation. Low temperatures must not result in excessive shaft loads (due to shrinkage) and at high temperatures elongation must be considered and avoided to ensure appropriate transmission of drive power.
- When designing the belt support in the return way, take into account the weight, length and position of the belt sagging that can occur depending on the temperature. It is important that fastening elements, cables and collection trays, don't touch the belt in any operating process.

3.2.2 SPROCKETS

The working temperature of the application could affect the minimum pulley size of the belt. The general rule of thumb is the lower the temperature, the bigger the sprockets to ensure smooth running.

Additionally, when the belt is joined by mechanical fasteners, the minimum pulley size should be considered. The sprockets can be fixed onto the shaft by applying two plastic retainer rings on both sides of the sprockets. A retainer ring is composed, in general as standard, of two half square parts with two screws. A small gap should be maintained between the sprockets, according to the effect of temperature. Please, always consider the cleaning aspects.

The number of sprockets that needs to be applied to drive the belt quantity largely depends on the width of the belt and the load conveyed. It is important to place sprockets on the drive shaft while the tail shaft can be either equipped with sprocket or flat idlers (also if **ELAClean®** positive drive belts are used); of course, with **ELAClean®** flat belt, flat idlers are used. More sprockets should be installed for heavily loaded belts or for application with scrapers. For more details contact **ELAClean®** technical service department.

Minimum sprockets number according to belt width

Belt width [mm]	150	250	300	380	450	530	620	700	760	900	1000	1100	1200	1300	1400	1500	1650	1700	1800
Sprockets 125mm distance (minimum quantity)	3	3	4	4	5	6	6	7	7	8	9	10	11	11	11	13	13	14	14
Sprockets 76mm distance (when maximum capacity is applied)	3	4	5	6	7	8	9	10	11	13	15	16	17	18	18	22	23	24	25
Carryways (minimum quantity recommended)	2	3	3	4	4	5	5	6	6	7	8	9	9	9	10	11	12	12	13

3.2.3 BELT SIDE GUIDELINES

If required, **ELAClean®** belts can be guided at the belt edges. It is also important, to do not use these belt guides to compensate poor belt tracking. Only use the materials specified in the previous table with the corresponding surface finishing to minimize abrasion. At the greatest width that the belt reaches under the given operating conditions, the gap at the side from guide components should be at least 3 mm (fig. A, top view). Place the first guide components close to the end pulley; the next ones at intervals of no more than 2000 mm towards the drive. Use long side guides to support the area of in feeds and out feeds of the products conveyed. During installation, make sure fastening elements don't rub against the belt (use countersunk heads crews) and that hygiene requirements are correctly observed. All guide surfaces should be accurately aligned in the conveyor direction and be perpendicular to the conveyor path.

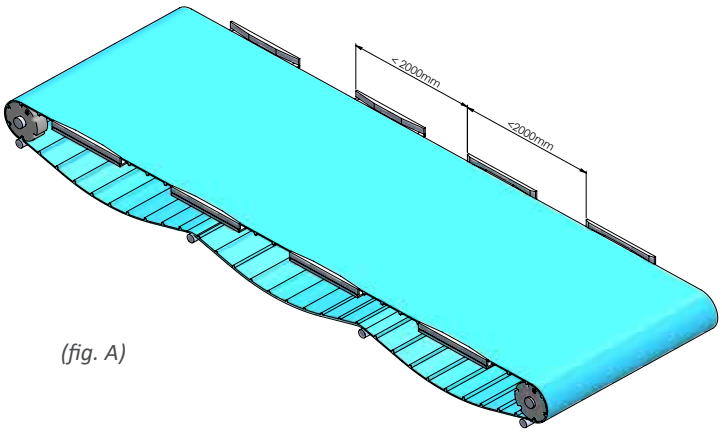

(fig. A)

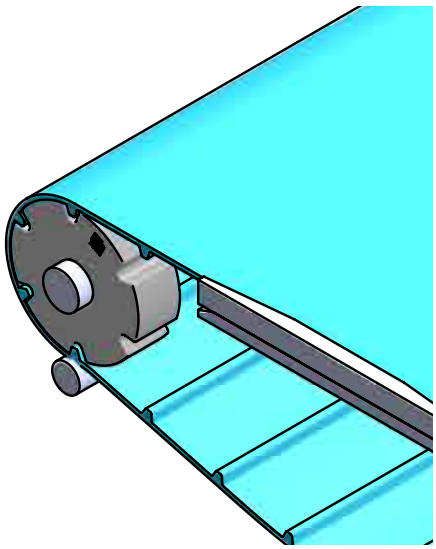

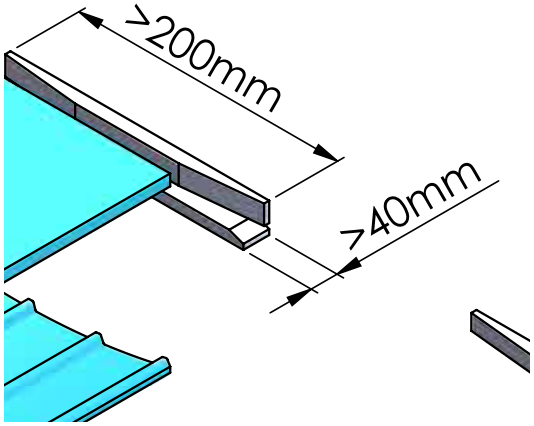

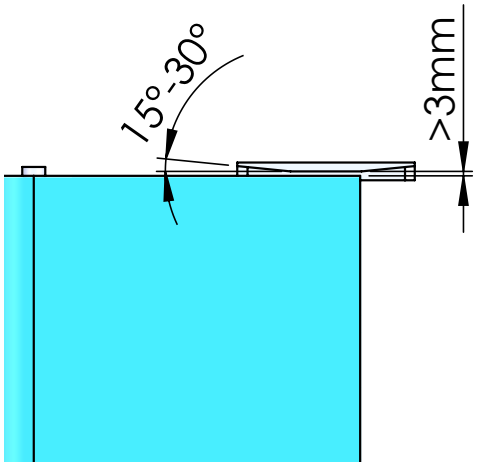

3.2.4 CONVEYOR SPEED

We recommend a soft start and soft a stop of the motor when the speed can be higher than 20 m/min (65 ft/min), or in case of loads greater than 70 % of the max. load allowed on the belts.

3.2.5 CONVEYOR LENGTH

The maximum conveyor length is generally limited by the belt's maximum tensile strength, but it can also be limited by the effects of elastic oscillation, which should be avoided. This can occur when the belt stretches under load and causes a slip-stick effect. The slip-stick-effect describes the effect of the belt alternating between sliding over and sticking to the slider bed. The determining factors to avoid the slip-stick effect are belt length, belt speed, loading, and friction. In general, the higher the speed and the shorter the conveyor, the lower the risk of slip-stick.

3.2.6 BELT LENGTH CALCULATION

The required belt length can be determined by using the following method:

- Find the total of the individual span lengths in the stretched state. Assume that position-dependent take-ups are extended 30 % (first picture).
- Find the total of the individual arc lengths at all deflection points (second picture).
- Find the additional required belt length resulting from the desired catenary sag (third picture).
- Add these values.
- Correct the result if necessary taking expected load states into account (belt length and width change depending on the loading).

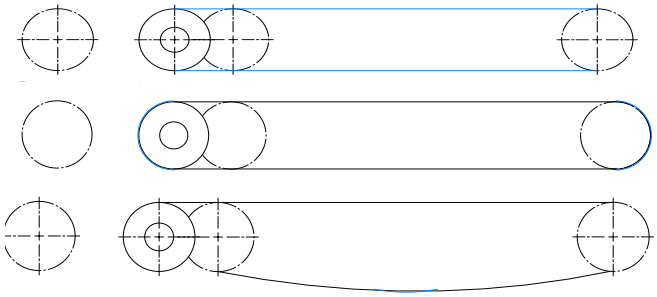

3.2.7 PRE-TENSION

Depending on the type and application, **ELAClean®** belts work with different pre-tensions. Even with low pre-tension, which could be generated by the belt sagging on the return side, it is often advantageous to use a take-up or quick tensioning release take-up. This makes the belt easy to fit, and provides good control over the belt sag. In addition, it permits fast and convenient cleaning of the belt and conveyor. The tensioning range should be calculated so that with the take-up extended 30 %, no pre-tension is generated, and at least the desired pre-tension can be achieved with the remainder of the travel.

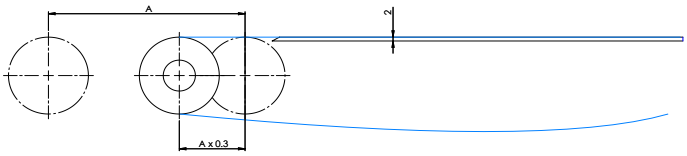

3.2.8 EFFECTS DUE TO THE TEMPERATURE

Plastics can expand or contract significantly with variations of temperature:

- Make allowances for possible changes in the belt length and width that occur when the operating temperature deviates from the original room temperature. This applies both to the belt sag on the return side and lateral clearance on the conveyor frame.
- Components such as guide rails and wearstrips also change size depending on the temperature. Take this into account for assembly (e.g. by providing elongated holes, fixing at only one point, placing slotted parts on sheet metal edges, etc.). Easy to clean gaps should be allowed between adjacent parts.
- Remember that the components and the belt expand at the same time, so gaps between them may become smaller from both sides due to temperature changes.

3.2.9 TAKE-UPS SYSTEMS

The belt contact pressure on the drive drum that **ELAClean®** requires to transmit the circumferential force is generated by a take-up device that can tension the belt.

Even if no pre-tensioning is required, a take-up device can be helpful, because:

- It can make easier to fit and remove the belt.
- It simplifies and speeds up cleaning processes.
- It can compensate temperature and load-dependent belt lengthening and, if necessary, control belt sag.

Position-dependent take-ups are usually used. In this case, a pulley is fitted that is adjustable in the conveyor direction (for example by screws). It can be moved parallel to the axis to apply the desired pretension or generate the desired belt sag.

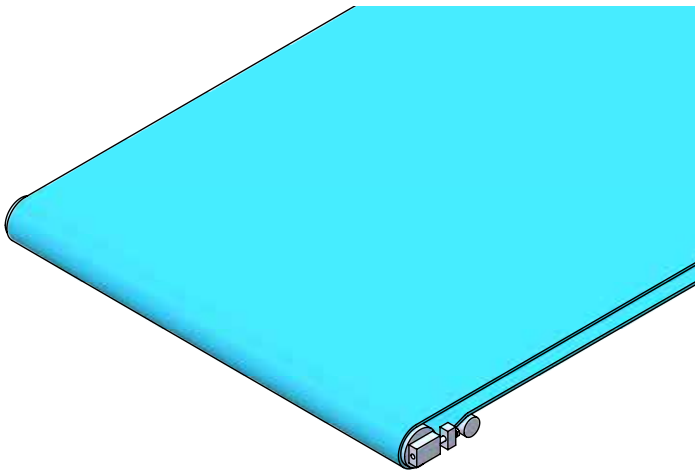

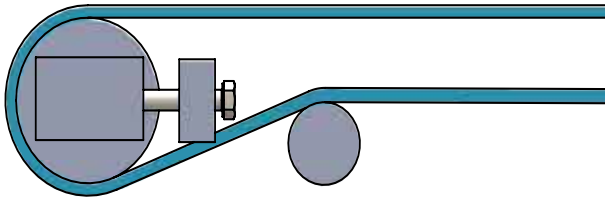

3.2.10 QUICK RELEASE DEVICES

Unlike adjustable take-ups, pure quick-action tensioning devices don't allow precise adjustment of the tension and belt sag.
Locking swing-open designs are common here. One end of the conveyor frame (including the pulley) is designed to swing up through a parallel axis. Swinging the device up completely slackens the belt and forms a large sag. This makes easier and faster cleaning processes and maintenances.
Once closed, the belt is correctly tensioned and in the right position again. Of course, it is possible and often useful to combine this with a take-up device.

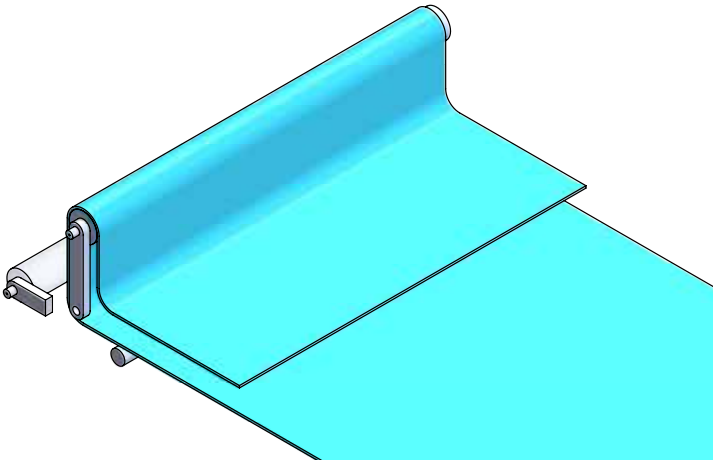

3.2.11 LATERAL CONTAINMENT

Synchronized Sidewalls

Complete sealing of the sides belt can be achieved with corrugate sidewalls as shown in figure to the right.

- Provide sufficient clearance from other conveyor components to avoid contact.
- Note that in the concave curve (on angle conveyors), the waves are compressed at the top edge and become wider across the conveyor direction.

Available sidewalls are listed in the sidewall paragraph.

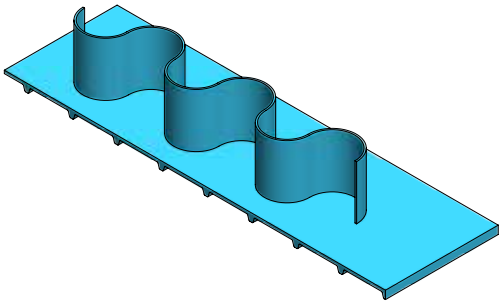

Side Strips

Side strips are lateral guides for the transported material (figure to the right). They should open in the direction of the belt travel (towards the outfeed end) to prevent transported material getting trapped between the sealing guide (strip) and the belt.
Fit sealing guides at right angles of the belt and only as close to the belt as the transported material requires.

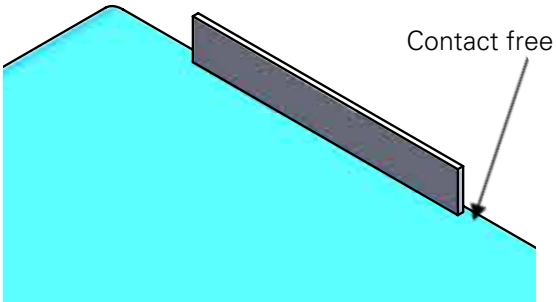

Side Skirts

Side skirts drag on the belt and can be used for lightweight transported material (figure to the right).
This can cause increased wear on the carrying side of the belt. Cleats may need to be moved inwards to make a space for them.

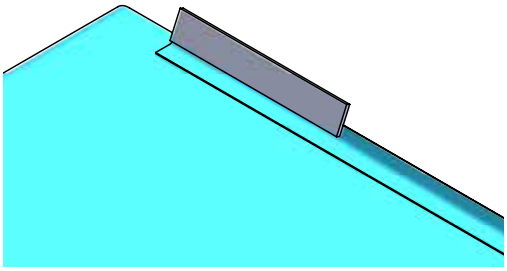

V-guides

Tracking guides are normally placed on the running side of positive driven belts, they can also be placed on the bottom side of the flat belts. They provide correct belt tracking in applications where long narrow belts are used for conveying products or in applications where wide belts are used (>600mm wide for ECW-P1 and >800mm wide for ECW-P2).
Tracking guides are also common where products are side loaded, which could otherwise cause a lateral shift in the belt's direction of travel.
In some cases these guides can be solid or notched to improve the flexibility of the belt. V-guides can be welded on the top or the bottom of the belt using a hot air gun, but also high frequency welding is possible.

When sidewalls and V-guides are used in case of back bending, pulley diameter should be at least 2.5 times bigger than the height of the sidewalls

3.2.12 SCRAPERS

As one or more scrapers may be used to ensure trouble-free operations, an extra allowance for driving power should be taken into consideration:

- The scraper needs to be well matched to the belt and with the transported material to avoid useless wear on the belt and to obtain effective cleaning of the surface.
- The best results are normally obtained with co-extruded scrapers that have a relatively soft scraper lip (metal detectable lip can also be used) and a rigid main body; thanks to their homogeneous structure they are suitable for any hygienic applications required.
- Scrapers should minimize bending and deflection after their installation, they usually could be supported by the conveyor frame.
- Don't fit the scraper at 90° with the belt.
- Provide adjustment devices to compensate for wear in the scraper strip.
- It is important to replace worn scrapers and damaged scrapers, otherwise they may damage the belt.
- Make sure that the belt is flat in the transverse direction at the scraper position (e.g. check the small clearance between the roller and the scraper at the relevant axis).

The scraper efficiently cleans the belt, ensuring surface cleanliness of conveyor belts and avoids:

- Clogging up the conveyor
- Staining conveyed materials
- Loss of materials

The scraper can also offer some benefits:

- Small footprint
- No lateral misalignment
- Can be adapted to existing or new installations
- Fits all types of conveyor belts
- Easy to clean
- Easier maintenance
- High resistance to hydrolysis if ether based
- High resistance to abrasion if ester based

The scraper is typically manufactured with the co-extrusion of thermoplastic based polymers, the rigid body is designed to be drilled and applied to the supporting structure of the conveyor belt through the use of steel screws, the soft lip guarantees the best cleaning process of the belt.

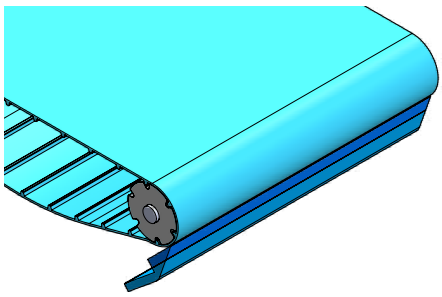

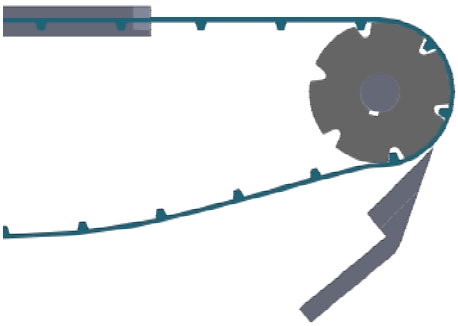

Only for ELAClean® Flat Belts

On the bottom running side, so called plough deflectors are often used before the end drum to prevent falling transported material coming between the belt and drum, they should only lightly touch the belt. Smooth drums without a lagging can be kept clean by steel scrapers, these can be positioned close against the drum surface and modified for the ring shape.

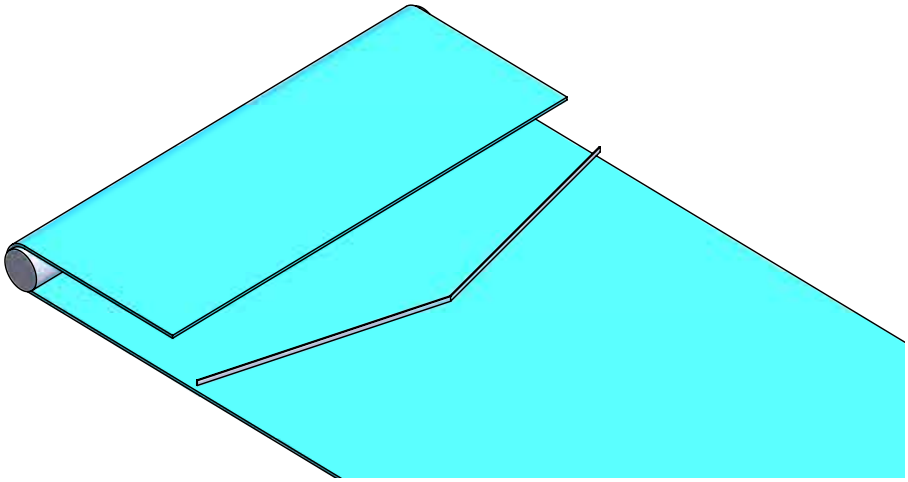

3.2.13 FEEDING THE TRANSPORTED MATERIAL

During loading, the conveyor belt is stressed in the vertical (impact) and tangential directions.
Devices that convey the transported material with low impact energy and a speed components could be used in the belt running direction (ideally at the same speed).
Loading should take place centrally to prevent deflection of the belt (material fed e.g. by chutes, guide plates, hoppers, feed silos).

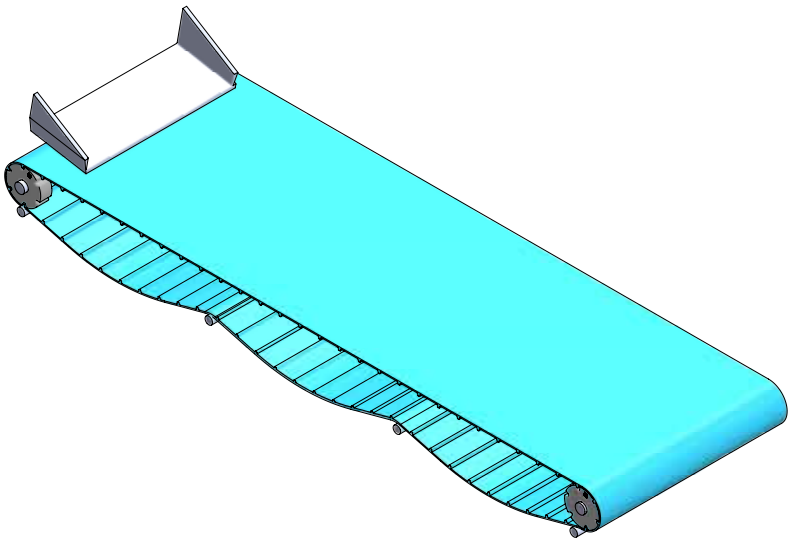

3.2.14 DESIGNING AXES AND SHAFTS

Shaft Profiles

Elatech® recommends with **ELAClean®** toothed belt, to ensure the best form-fit, the use of a square shaft. They have the advantage that with positive drive belts the tracking is possible without keys and key-ways. This means less time and manufacturing costs. Round shafts can be used with feather keys for narrow belts with high loads. Specially designed sprockets with special bore are also available under special request order.

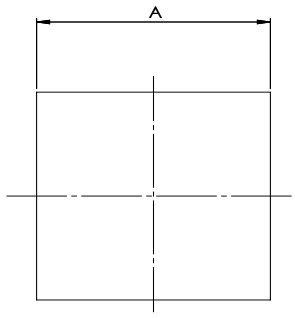

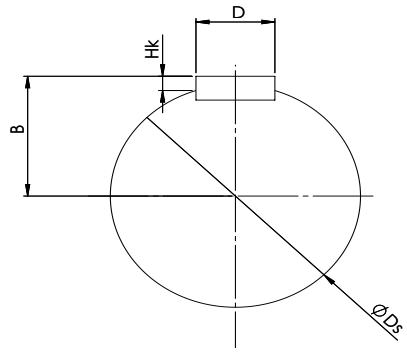

Deflection of Shafts, Axes, Drums and Rollers

The belt pull can cause axes and shafts deflection. In case of large bearing distances and small diameters used, this effect can be amplified. Please, follow these main topics:

- Keep deflection as small as possible to minimize material fatigue and ensure a small, uniform and constant transfer gap (**Elatech®** recommends keeping the value < 2mm)
- If the belt pull causes deflection > 2mm, change the dimensioning or try to use an intermediate bearing.

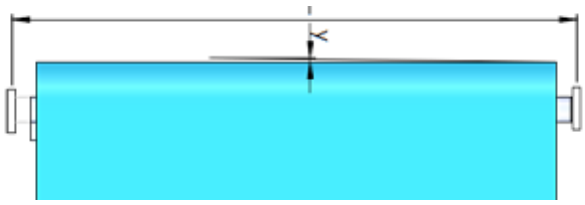

Material	E [MPa]
Steel	200000
Stainless steel	180000
Aluminium	700000

The deflection can also be estimated using the following method:

$$y = \frac{(5 \cdot F_s \cdot l^3)}{(384 \cdot E \cdot In)} \quad [mm]$$

Where:

- y is shaft deflection *[mm]*.
- F_s is the shaft load *[N]*.
- l is the bearing centre distance *[mm]*.
- E is the modulus of elasticity *[MPa]*.
- In is the area moment of inertia *[mm⁴]*.
- A is the edge length of square bore.
- d_s, d_{in}, d_{out}, is the diameter of shaft *[mm]*.
- t is the wall thickness of shaft *[mm]*.

Shaft type	I (Area moment of inertia) $[mm^4]$
Round	$\frac{\pi \cdot d_s^4}{64}$
Hollow round	$\frac{\pi \cdot (d_{out}^4 - d_{in}^4)}{64}$
Square	$\frac{A^4}{12}$
Hollow square	$\frac{\pi \cdot (A^4 - (A^4 - t^4))}{12}$

Shaft Torsion

Due to the belt pull, shafts twist while working transmitting torque. In case of long and thin shafts, together high tensile forces and large sprockets, this effect can be increased. If this torsion is too much, the teeth will not engage correctly with the sprocket. **Elatech®** recommends keeping a torsion angle α (alpha) < 0.5% of meters length of the shaft.

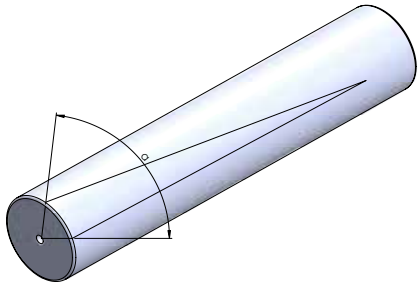

Material	G *[MPa]*
Carbon steel	80000
Stainless steel	75000
Aluminium	27000

The shaft torsion can be calculated using the following formula:

$$\alpha = \frac{(90 \cdot F_{ad} \cdot D_0 \cdot I_s)}{(\pi \cdot G \cdot I_T)} \; [°]$$

Where:

- α is the torsion angle in drive shaft *[°]*.
- F_{ad} is the adjusted belt pull *[N]*.
- D_0 is the pitch diameter *[mm]*.
- I_s is the shaft length *[mm]*.
- G is the modulus in shear strength *[MPa]*.
- I_T is the torsional inertial force *[mm⁴]*.

Shaft type	I_T (Torsional inertial force) *[mm⁴]*
Round	$\frac{\pi \cdot d_s^4}{32}$
Hollow round	$\frac{\pi \cdot (d_{out}^4 - d_{in}^4)}{32}$
Square	$0.141 \cdot A^4$
Hollow square	$0.141 \cdot \left(\frac{A}{2}\right)^2$

3.3. BELT SUPPORT ON CARRYING SIDE

3.3.1 GENERAL

When belt supports are needed, it's important to design them correctly, following the general information according to the hygienic design guidelines:
Always precisely align the slide supports, as these have a very strong guiding effect on the belt.
Position the slide supports as shown in this manual.
For the slide support, use only the materials listed in the specific section. These materials produce favorable friction characteristics.
Thoroughly clean the slide supports before putting the conveyor into service. Otherwise, residues of protective paints or other contamination could cause several problems (as tracking issues, belt damage, increased friction on the running side).
Consult **ELAClean®** technical department if particularly heavy materials have to be transported and high point loads occur.

3.3.2 FLAT PLATE SUPPORTS

Full width surface table supports are recommended for system with heavy loads (fig A):
Use only materials according to the specifications in the material table section
Carefully round off edges and slightly chamfer sliding surfaces in the conveyor direction
The thickness "h" should be at least large enough to allow fastening elements such as screw heads to be completely countersunk, and so that the chamfer in the conveyor direction can be formed

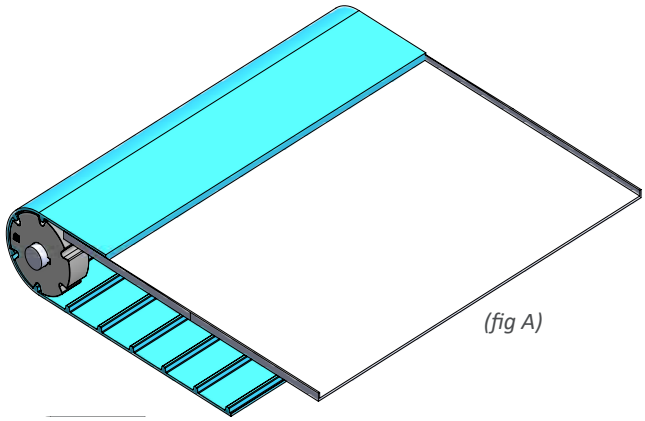

(fig A)

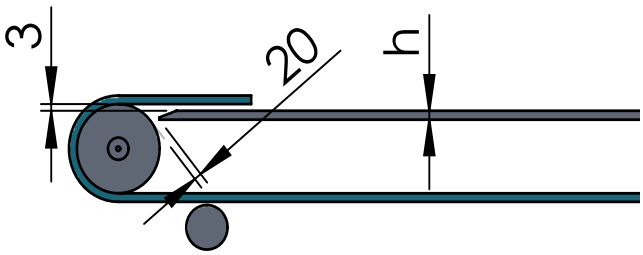

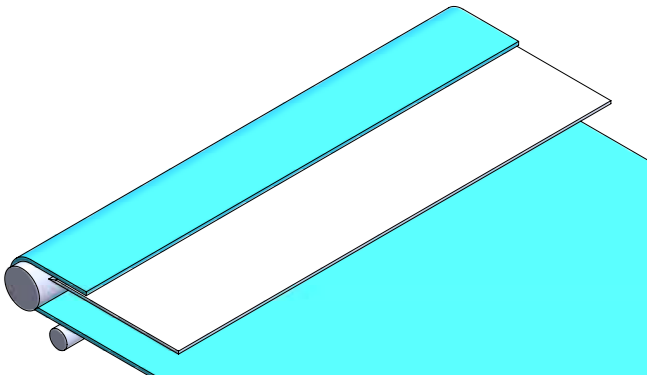

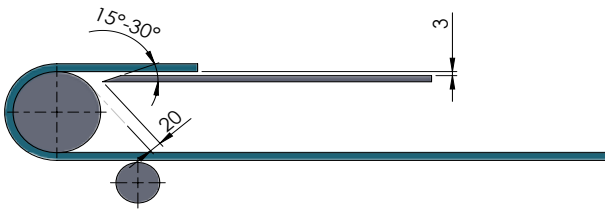

The design is dependent on the belt type used and the conveying task. For better hygiene, the slider bed and side guides can be designed out of one piece.

3.3.3 WEARSTRIPES (PARALLEL AND V-SHAPED)

Parallel Wearstrips

For applications with very light loads, parallel wearstrips can be used on a flat belt, but **Elatech®** recommends roller supporting. Note in this case that the underside of the belt is subject to increased wear in the area of the wearstrips, so please follow the guidelines below:

- Use only materials according to the specifications in the materials table.
- See figures A and B for the main dimensions of wearstrips and their positioning.
- Thickness "h" should be at least large enough to allow fastening elements such as screw heads to be completely countersunk, and so that the chamfer in the conveyor direction can be formed.

In addition, the thickness is determined by this static requirements:

- The sliding surface must be flat and aligned in two directions with the running way.
- Carefully round off edges and slightly chamfer sliding surfaces in the conveyor direction.
- Stagger the joints of the wearstrip sections in the conveyor direction. A minimum gap should be kept between the individual sections in the conveyor direction (dimension "x") that can compensate length changes due to temperature fluctuations and be easily cleaned.
- Check whether sections with flat (full surface) support are appropriate in the transported material in-feed area.

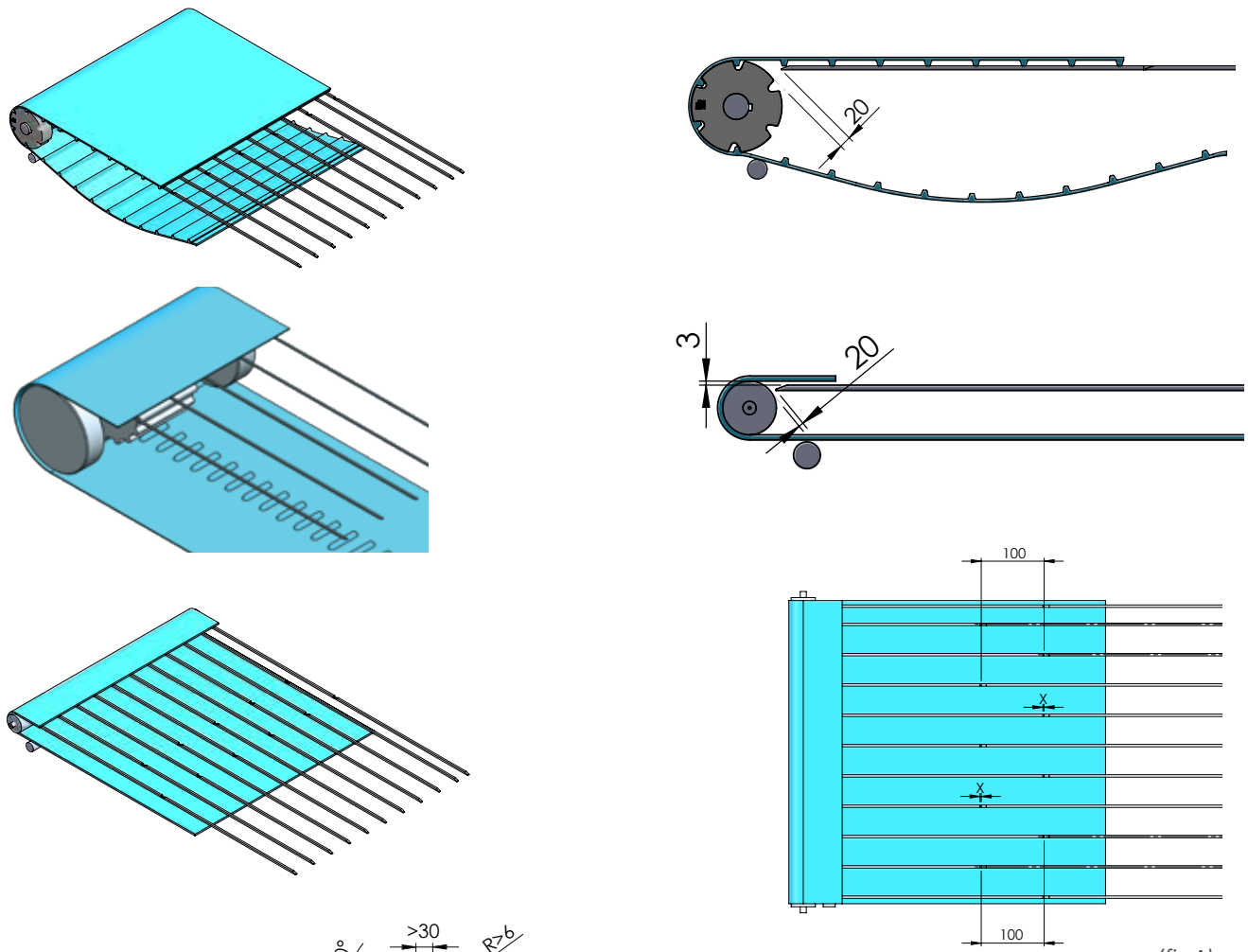

(fig A)

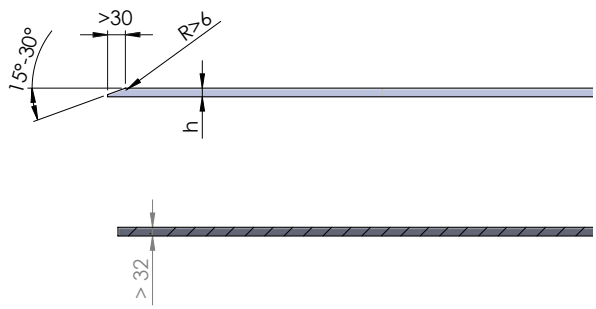

(fig B)

3.3.4 V-SHAPED WEARSTRIPS

V-shaped wearstrips (belt is supported across its full width)

- Use only materials according to the specifications in the materials paragraph.
- Select the angle and spacing so that the individual V-shapes reach into one another and support the belt across full width.
- See figure A for the main dimensions of wearstrips and their positioning.
- Thickness "h" should be at least large enough to allow fastening elements such as screw heads to be completely countersunk, and so that the chamfer in the conveyor direction can be formed.
- In addition, the thickness is determined by the static requirements.
- Carefully round off edges and slightly chamfer sliding surfaces in the conveyor direction.

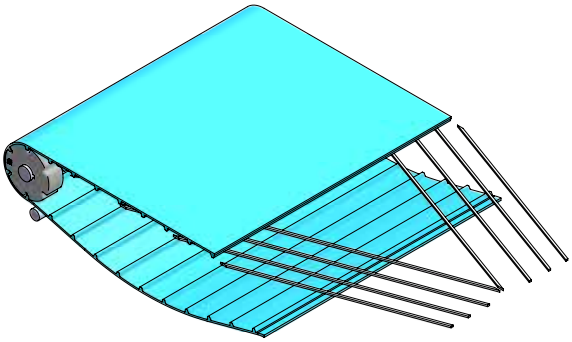

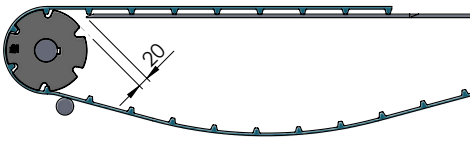

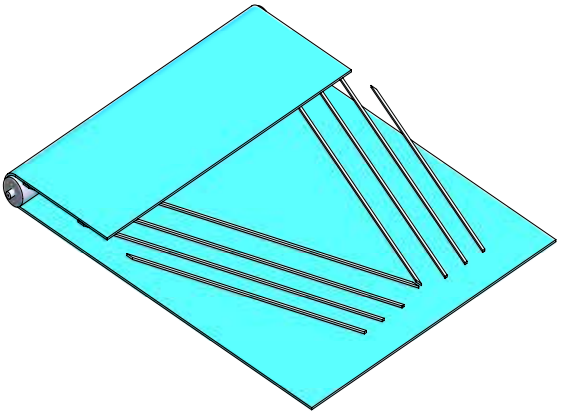

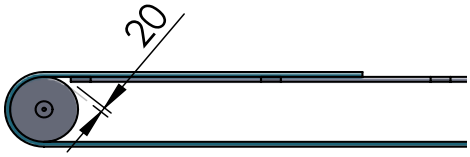

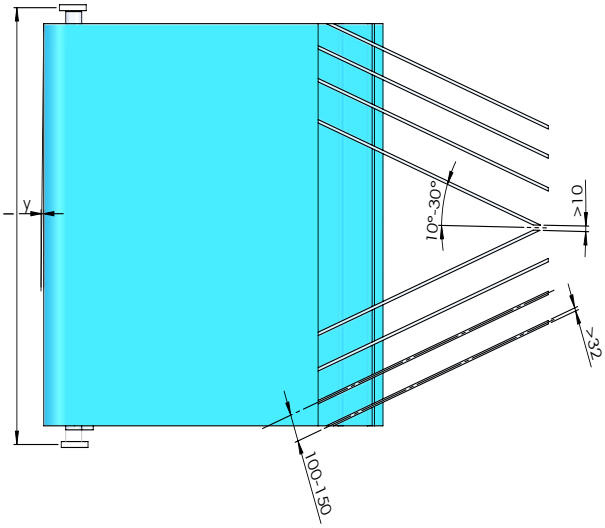

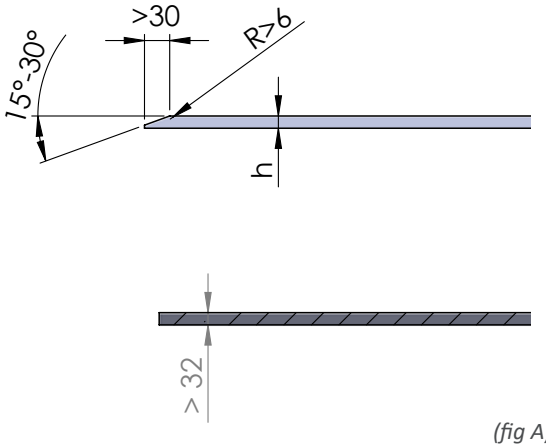

(fig A)

3.3.5 SUPPORT ROLLERS

Elatech® recommends roller supports on the carry way side only for the **ELAClean®** flat belt, through conveyors are an exception.
For conveying unit goods, the support roller spacing are determined by the edge length of the unit goods being transported (25% of the length of the transported goods).
Support rollers can support either the full belt width or section of it.

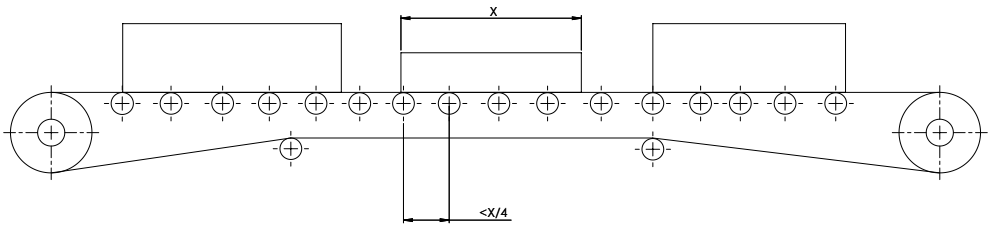

3.4. BELT SUPPORT ON RETURN SIDE

3.4.1 GENERAL

The correct design of the return side is very important for the trouble-free operation of the conveyor.

- When designing the belt support for the return side, follow these main points:
- Determine the values for changes in the belt length and width at lowest/highest operation temperature, and take these into account in the design.
- Include the design of the return side in all considerations concerning accessibility for maintenance and repairs, ease of conveyor cleaning, belt changes, etc.
- For belts wider than 600mm, **Elatech®** recommends straight cleats sectioned so that a support can be provided in the return side.
- Use only materials according to the specifications in the material's table

3.4.2 RETURN ROLLERS

It is recommended the use of return rollers or return wheels (as in the pictures below) to support the belt on the return side. Return rollers can support either the full belt width or sections of it. In the slack side return rollers can be used for **ELAClean®** flat belts and **ELAClean®** positive drive belts.

Some information about the return rollers:

- Machined return rollers on the bottom side of an **ELAClean®** positive drive belt, that support the belt on the return way, are recommended (fig. A at next page).
- Parallel to the conveyor direction, return roller is provided at interval of 500-800mmm.
- For belt with cleats and/or sidewalls, only narrow return rollers can be used.
- Return rollers can also be used with an **ELAClean®** flat belt, keep in mind that this belt has to work only under-tension (fig.B at next page).

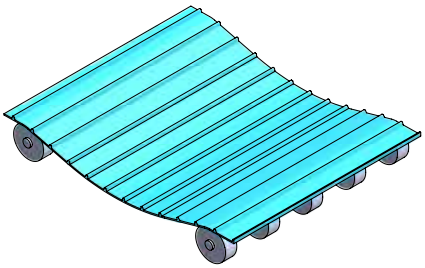

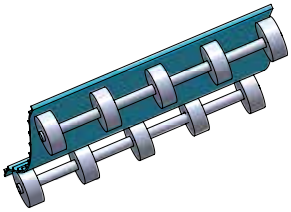

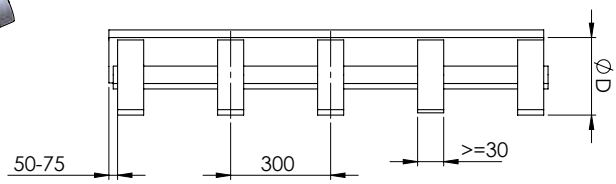

(fig A)

(fig B)

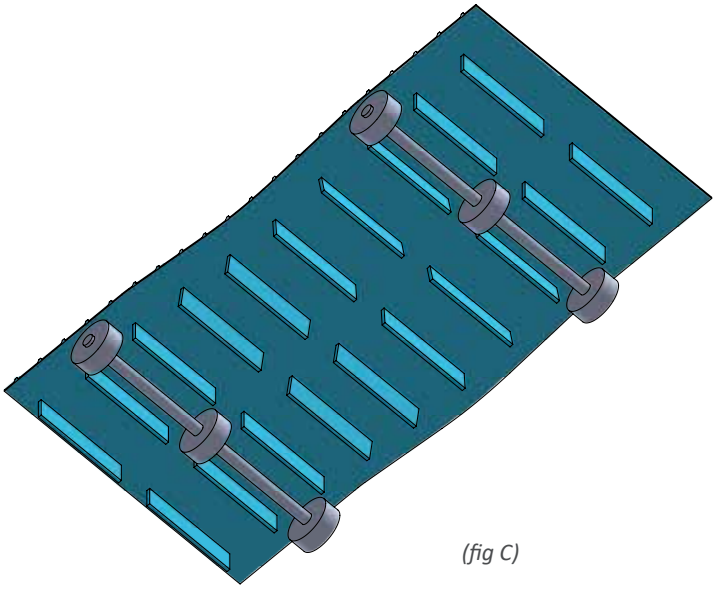

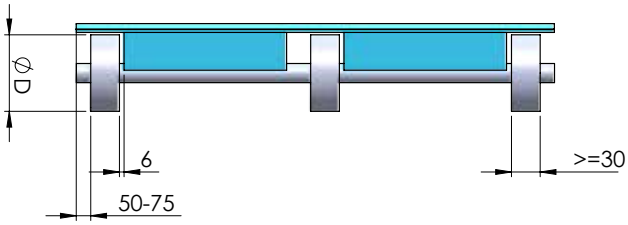

(fig C)

Sliding belt supports in the return way, in the form of fixed parallel wearstrips, slide shoes or slide wheels can be used in several applications where catenary sag is not allowed. See the picture on the right.

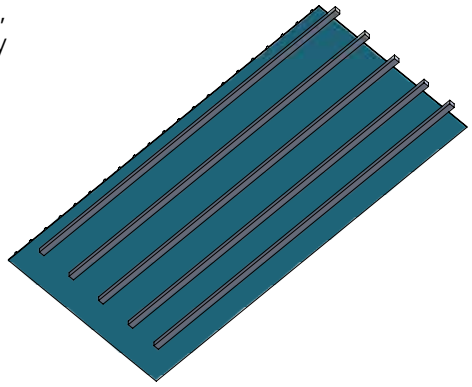

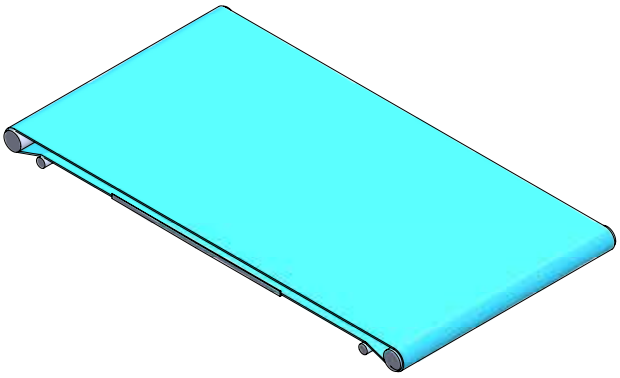

In some specific conveyor with **ELAClean®** flat belt, where the belt is not wet, you can use a flat plate to support the return way of the conveyor (pictures on the left).

3.4.3 WEAR SHOES

A return way side of the belt can have various framework styles with elements such as rollers (previous paragraph), intermittent wear shoes (such as in fig. C previous page) and wearstrips (as already mentioned). Positive drive belts can use a combination of continuous and intermittent supports. It usually depends on the conveyor configuration.

Due to the application, the return way supports can be dynamic, as rollers, or static as wear shoes and parallel wearstrips.

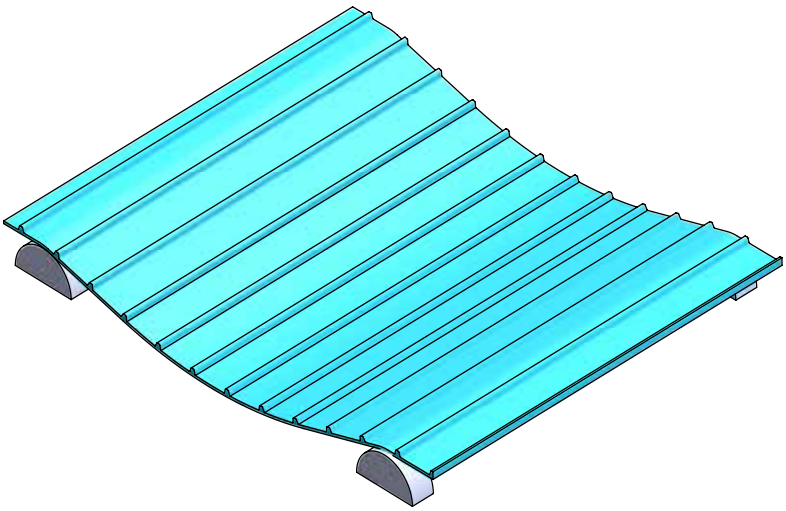

3.5. FLAT BELT CONVEYOR DESIGN

3.5.1 GENERAL

This section contains design information that applies specifically to G
belts.

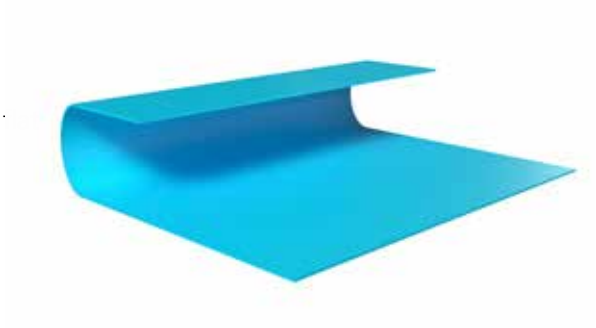

3.5.2 DRIVE TYPE

Head Drive

This drive is used for most conveyor functions. The drive shaft is located at the head of the conveyor (outfeed side) and pulls the belt (picture below).

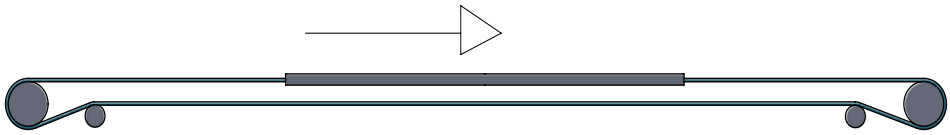

Snub Rollers

Use snub rollers, if necessary, on the return side to increase the wrap angle at the drive/idler pulley and/or to minimize the distance between the carrying and return sides (picture below).
The diameter of snub rollers can be up to ½ d_{min} as long as the wrap angle doesn't exceed 15°.

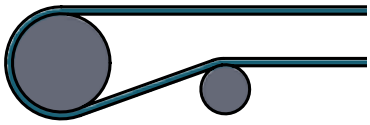

Lower Head Drive

This is a variant of the head drive where the drive shaft/drum is arranged in a lower position. It means that the smallest possible pulley diameter can be used at the transfer point (roller) to minimize the transfer gap (picture below).

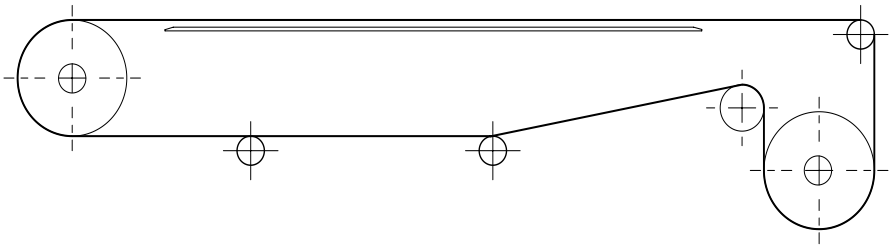

Centre Drive (Ω-Drive)

Due to limitations in the top side support on the return way, the belt with sidewalls and cleats are not suitable for centre drive applications.
Centre drive (Ω-drive) is typically used when:

- The smallest possible pulley diameters are required at the in-feed and out-feed side to minimize the transfer gap.
- Reversing operation is possible, however a reverse operation is more complex to belt tracking and is not recommended by **Elatech**®.

A large wrap angle on the drive produces optimal conditions for reliable power transmission in both running directions (picture below).

With a light belt load, the wrap angle can be smaller, which also gives the conveyor a flatter shape (picture below).

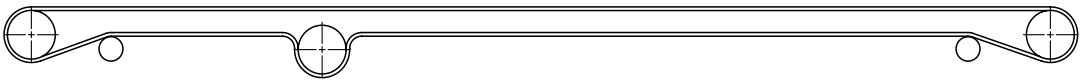

In both cases, the axes/shafts at the ends of the conveyor system are high loads because the belt pull is present as belt tension on both the tight and slack sides of the belt.

- Arrange the drive shaft in the middle if possible
- The belt length between the snub roller and drive should be shorter than between the snub roller and the next support roller. Otherwise, weight rollers are required in the desired sag area.

Tail Drive (Pusher Configuration) and Alternating Tail - Head Drive

If a head drive reverses direction, it becomes a tail drive (picture below).

This means that the drive unit has to push the loaded belt. In this case, if the return side tension is not greater than the carrying side tension, the belt may slip on the drive drum.

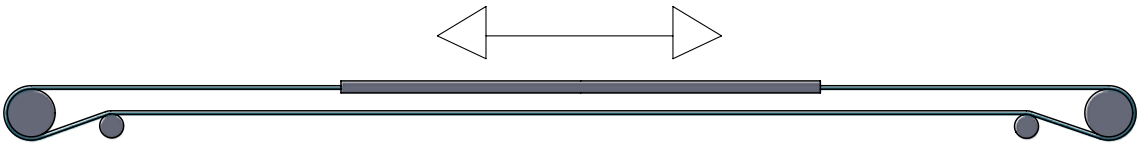

3.5.3 DRIVE AND IDLER DRUMS

Shaft Design

For dimensioning the shafts, see the corresponding paragraph in the proper section.
As an alternative to a conventionally drive shaft, a drum motor can be used.

Geometry of Drive and Idler Drums

If the diameter is too small, it will lead to unacceptable deflection of the drums, particularly on wide systems. This will cause undesired wrinkling of the belt and poor tracking. Drum diameters should always be as large as possible.

The smallest permissible diameter is determined by:

- The circumferential force to be transferred.
- The bending characteristics of the belt type used.
- The bending characteristics of the welded-on lateral and longitudinal profiles.

Drive and idler drums are usually cylindrical as in figure A. Conical-cylindrical drums (fig.B) are particularly useful for short belts due to their higher tracking effect. The belt width should be smaller than the drum length.

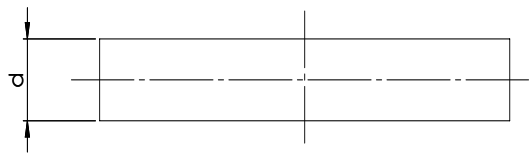

(fig A)

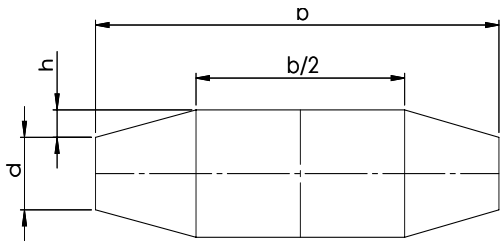

(fig B)

Drum diameter [mm]	< 200	200-500	>500
Conicity h [mm]	0.5	0.8	1.0

3.5.4 BELT TRACKING

Conveyor Design and State Of Repair

The conveyor frame should be as rigid as possible. It must not be distorted by the forces applied by the belt. If the axes are not arranged at right angles to the belt conveyor direction, the belt will run off track (picture below).

All the rollers, drums and shafts in the conveyor layout, as well as supports and guide elements, should be:

- Clean and always in good conditions.
- Axially aligned parallel and at right angles to the conveyor direction.
- Laterally aligned in relationship to one another.

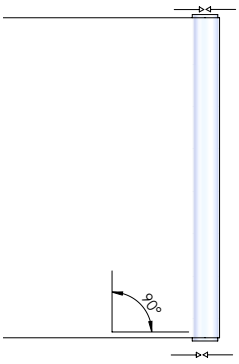

Effect of Temperature

Strong asymmetrical heating and loading on a conveyor can cause uneven changes in the belt's inner tension. This creates steering forces which could cause the belt to run off track. In these cases, an automatic belt tracking system is recommended.

Alignment at a 90° angle

- Align the conveyor torsion-free and adjust all axes and shafts so that they are horizontal (measured across the conveyor direction)
- Measure the diagonal distance "a" between the ends as shown in figure on the rigth. If the distances are equal, the alignment is correct. Make sure that the distances in the conveyor direction are correct after the alignment.

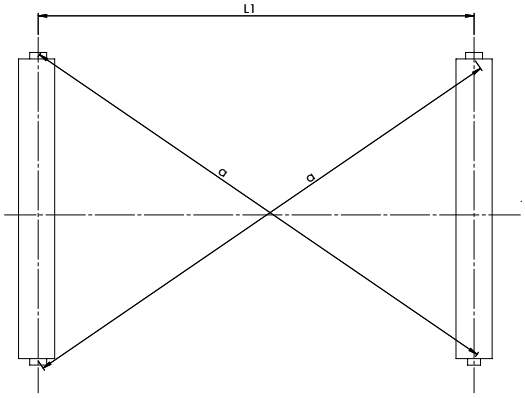

If the shafts are too far apart or obstacles are in the way, you can measure the distance "b" between ends and a point "A" on the centre line of the conveyor (picture on the right).

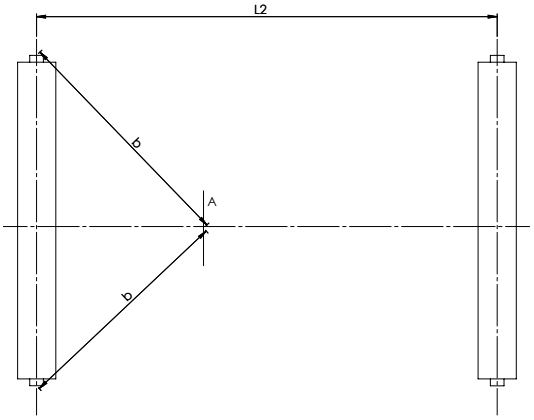

Belt Tracking at The Pulleys

Drums, rollers and shafts should be arranged adjustably to compensate possible manufacturing tolerances in the system and the belt (picture below). If proper belt tracking cannot be achieved in this way, options include using slanting rollers or automatic belt tracking systems.
For so-called "square" systems (axis distance ~ belt width) or an even worst length/width ratio, the belt can no longer be adjusted via conical-cylindrical or crowned drums.

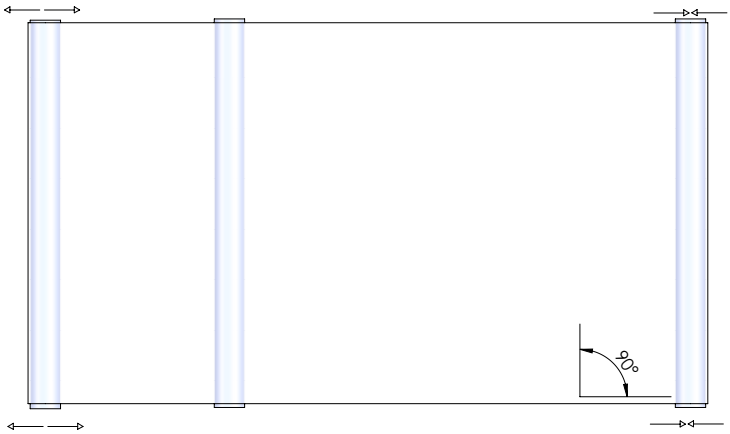

Belt Tracking with Snub Rollers

A very effective way to track the belt is to use snob rollers such as C, D shown in figure A.

The greatest tracking effect is always exerted by the snub roller where the return side meets the end pulley.

- If the belt runs in direction 1, snub roller is C.
- If the belt runs in direction 2, snub roller is D.

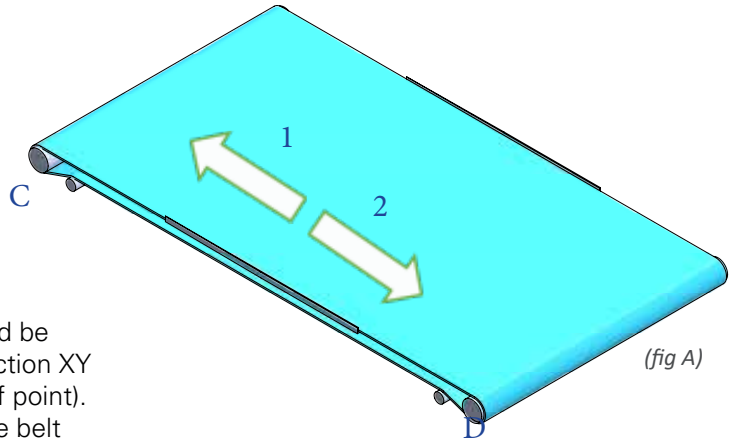

(fig A)

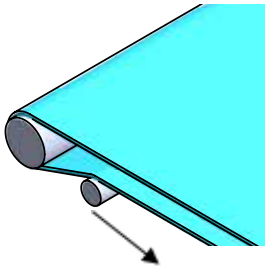

The snub rollers should be adjustable only in direction XY (belt run-on and run-off point). Following that way, the belt edges are hardly affected at all.

Belt Tracking with Center Drive/Ω-Drive

Snub idlers G and F as well as drive shaft E are adjustable in the direction of the arrow shown in the figure (fig.B).
As a simple design solution, the system composed by G, F and E can be installed on a plate which is movable along the return way (like a unique piece).
For the arrangement, design and control characteristics of drums A, B, C and D, see the previous and next pages.

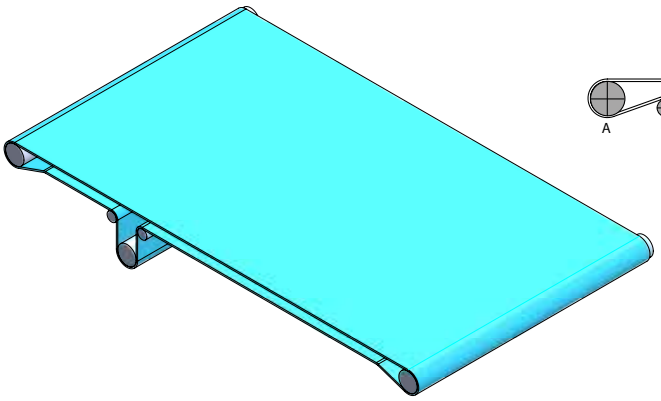

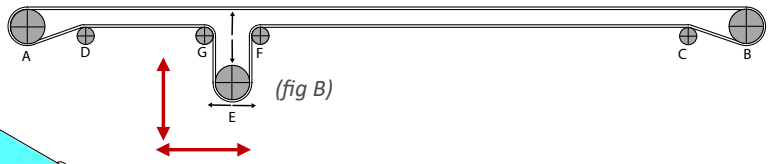

(fig B)

Belt Tracking with Reversing Systems

The precision with which the system and the belt are manufactured is important for trouble-free belt tracking in reversing operation.
It is not easy to adjust the belts correctly in reversing operation. Once the conveyor belt is adjusted correctly in one direction, it often runs off track in the other conveyor direction. It takes some time to adjust the drums correctly (fig.1 on the right).

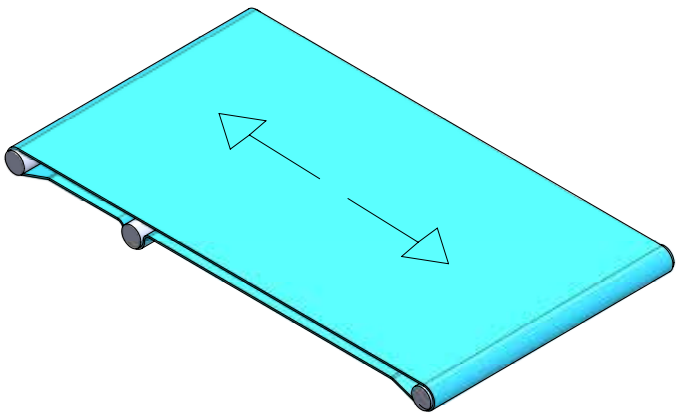

Effect of Support Rollers

For troughed belts, tracking can be improved by rotating the side rollers at some roller stations forward by up to approx. 3° in the direction of belt travel, depending on the belt speed (fig.A). Non-troughed belts can be kept under control adequately by installing some horizontally adjustable support rollers, then pivot them forwards by about 2-4° (fig.B).The effect of supporting rollers can mainly be used with long belts.

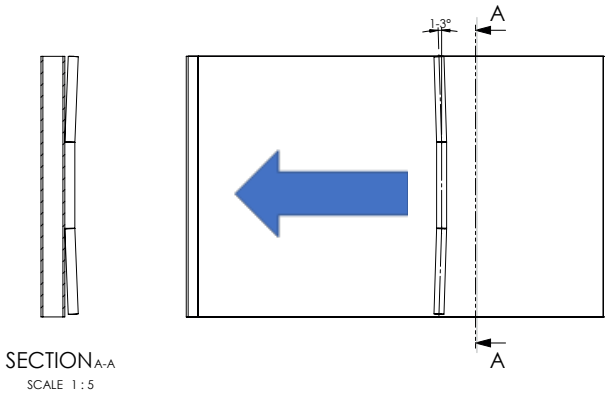

(fig A)

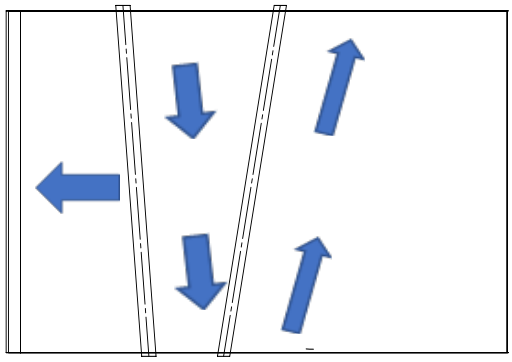

(fig B)

Effect of Negatively Troughed Roller Sets

A negatively troughed roller set in the return side is very effective at centring the belt, if it is positioned close to the tail drum (fig.C).

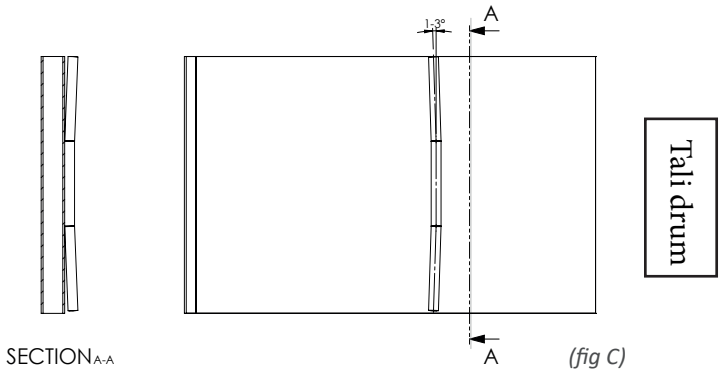

(fig C)

3.6. POSITIVE DRIVE BELT CONVEYOR DESIGN

3.6.1 GENERAL

ELAClean® positive drive is a polyurethane toothed belt for form-fit power transmission.
As a result, the belts are slip-free and enable accurate positioning. Sprockets can be arranged almost as close together as desired, and therefore transmit relatively high forces.

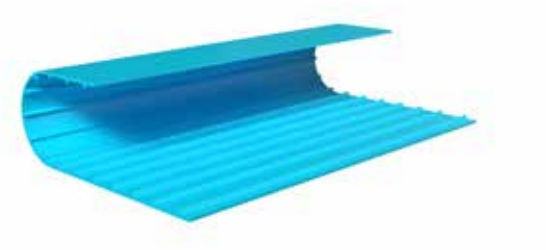

3.6.2 DRIVE TYPES

Head Drive

This drive type is used for most conveyor functions. The drive shaft is located at the head of the conveyor (outfeed side) and pulls the belt (fig.below). For the end pulleys, either sprockets (recommended by **Elatech®**) or cylindrical rollers or wheels can be used. For sprockets, pressure rollers can be provided if required (fig. below).

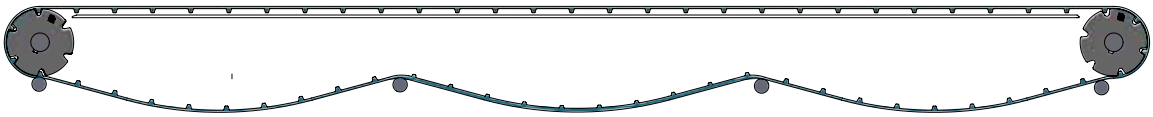

Belt Sag (For Positive Drive Only)

The height of the sag results from the belt length at the current operating temperature, the load state, and the distance between supports. The largest always occurs in the longest section without support.

- Specifically plan the longest unsupported section as a buffer zone for belt expansion. The sagging belt loop must never run against other parts.
- For the short sections, plan different lengths to prevent vibrations.
- Note that the mass of the belt in the sag affects the belt tension.
- For conveyors up to a length of 2000 mm, a belt support in the return side is not required.
- To ensure proper belt wrap angle, position the first belt support roller close to the drive shaft so that the belt sag is as little as possible.

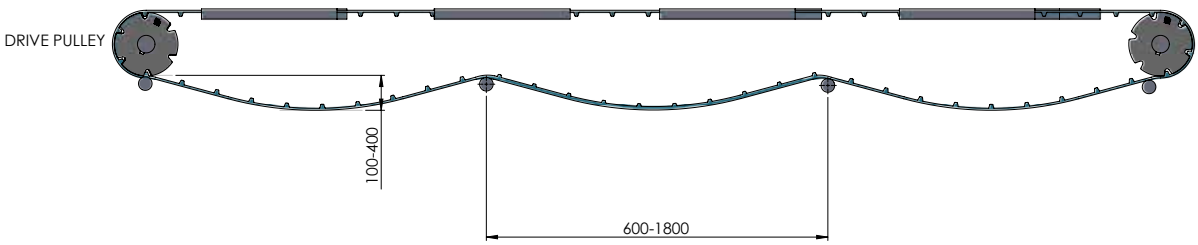

Controlling the catenary sag by means of a suitable return way design.

- Minimal pre-tensioning (up to 0,5%). Used for low load applications, for short/medium length conveyors (in general up to 2000mm conveyor length) and for stable ambient temperature. In these cases, it is not necessary to have belt sags, the elongation of the belt is not relevant for the conveyor layout.
- Pressure rollers can be used when medium/high load are conveyed, it has to be positioned close to the drive pulley. The distance can vary according to the load.

- **Medium load**, a small sag between the pressure roller and the drive pulley can be kept. It is not necessary to ensure the complete engagement of the drive pulley with the toothed belt.

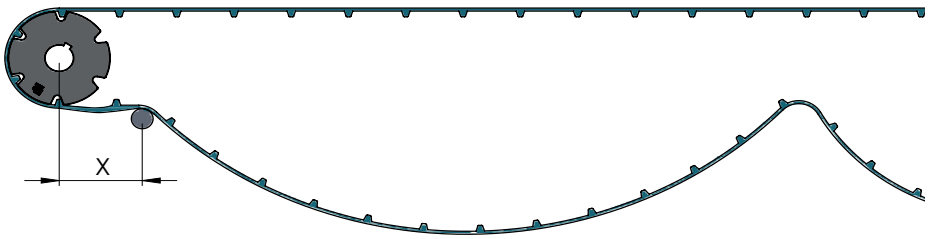

- **High load**, the pressure roller has to be installed close to the drive pulley to ensure the complete meshing pulley-belt, otherwise the elongation of the belt can introduce some problems of vibration and tooth-jump (consequently noise and non-linear process).

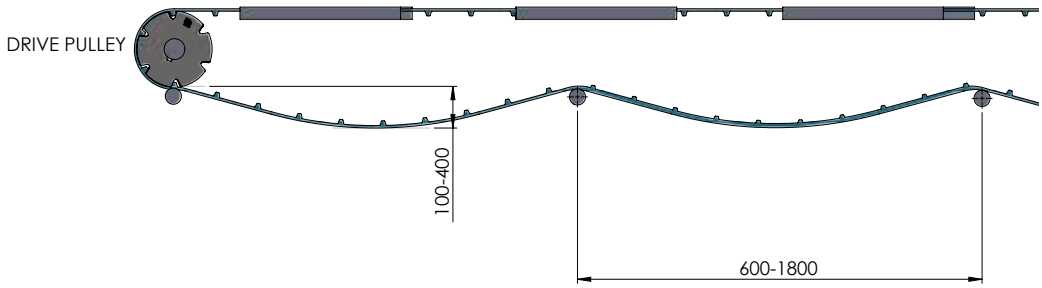

Centre Drive (e.g. Ω-Drive)

Due to limitation in top side support on the return way caused by sidewalls and cleats, these are not suitable for centre drive applications.

Centre drive (e.g. Ω-drive) is typically used when:

- The smallest possible pulley diameters are required at the in-feed and out-feed side to minimize the transfer gap.
- Reversing operation is possible.

The belt tracking, in case of reverse operation, is more complex and it is not recommended by **Elatech®**.
A large wrap angle on the drive produces optimal tooth engagement conditions for reliable power transmission in both running directions (fig. A, first picture). In this case a snub roller can guarantee the proper wrap angle.
With a lighter belt load, the wrap angle can be smaller, which also give the conveyor a flatter shape (fig.B, second picture).

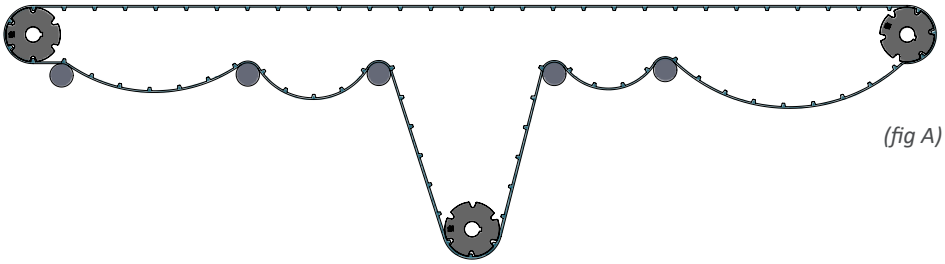

(fig A)

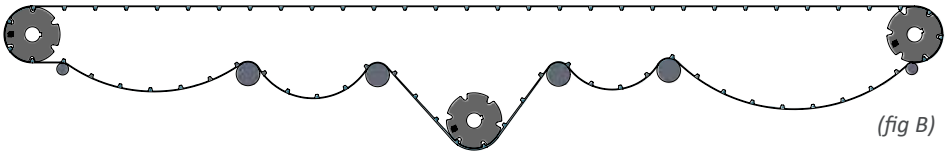

(fig B)

In both cases, the axes/shafts at the ends of the conveyor system are under higher loads because the belt pull is present as belt tension on both, tight and slack sides, of the belt.

- Arrange the drive shaft in the middle if possible.
- On the right and left of the drive unit, provide sections in which the belt sags. This sag is required for the necessary belt tension.
- The belt length between the snub roller and drive should be shorter than between the snub roller and the next support roller. Otherwise, gravity take-ups are required in the desired sag area.
- For the end pulleys, either sprockets (recommended by **Elatech®**) or cylindrical rollers can be used. For sprockets, pressure rollers can be provided if required.

3.6.3 DRIVE AND IDLER SHAFTS

Positioning Wearstrips

If parallel wearstrips are used, we recommend arranging them in line with the sprockets (fig.A).
For heavy loads, the wearstrips can be arranged between the sprockets. This makes the gap smaller, and the belt is supported in the best way.
It is important to support the **ELAClean®** belts properly, many conveyors originally created to run with modular plastic belts didn't require any support because they were more rigid on the sides. In this case of thermoplastic belts, in order to avoid distortion and wear, supporting the belt is important.

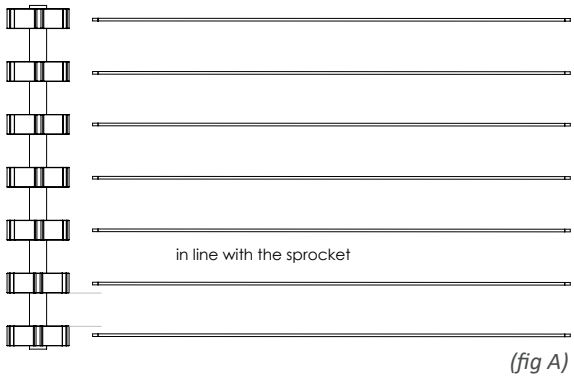

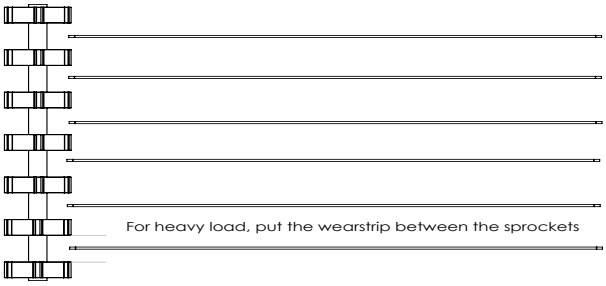

(fig A)

Sprocket Diameter

Sprocket diameters should always be as large as possible. The smallest permissible diameter is determined by:

- The circumferential force to be transmitted according to the calculation.
- The bending characteristics of the belt type used.
- The bending characteristics of the cleats welded on the belt.

If necessary, use pressure rollers to increase the wrap angle.

Attaching the Sprockets

The middle and outer sprockets should be mounted on the shaft with slight gap of max.1 mm in the axial direction (figs. below).

- Use one of the assembly methods shown in the next picture.
- Spacers can be also used to fill the gaps between sprockets.

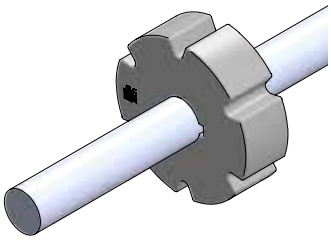

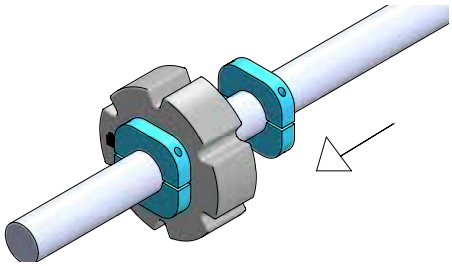

Sprocket Positions on The Drive

The distances between the sprockets should be no greater than 125mm.
To install the sprockets on a conveyor, please consider as follow:

- Divide the belt width by 125mm, round up the result and add 1. This gives you the required minimum number of sprockets (it is a general guideline, for further information please contact **Elatech®** department) .
- If the result is an even number, we recommend adding one more sprocket.
- Narrow belts with a width < 300mm are an exception to this rule. In this case, two sprockets are enough.
- Never fit a belt with only one sprocket.
- Move the outer sprockets inwards by approx. 38mm and spread out the remaining sprockets evenly between them.

The number of sprockets may need to be increased depending on the load. This is calculated using the ratio between the specific and the maximum permissible belt pull.

- During operation, the belt must not dip more than 2mm between the sprockets in the drive shaft region. Add sprockets if necessary.
- For heavy loads (or if scraping needs to be particularly effective), place sprockets close together. Ensure that the design meets hygienic requirements, keep in mind also cleaning process.

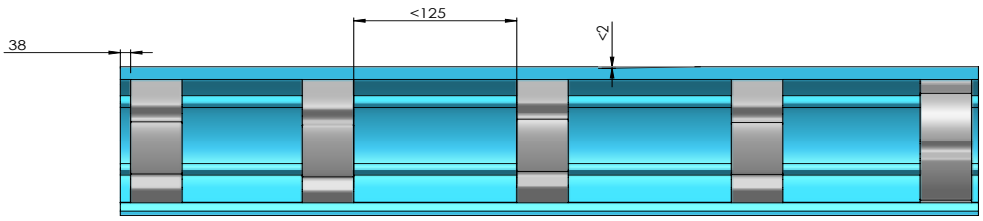

As a general guide lines, please consider:

F_{adj} / F_{adm}	Max distance between drive sprockets
≤ 20%	125mm
≤ 40%	60mm
≤ 50%	50mm
≥ 50%	Contact the technical department

Where:
F_{adj} is the adjusted belt pull capacity [N]
F_{adm} is the allowable load of the belt [N]

3.6.4 BELT TRACKING

Conveyor Design and State of Repair

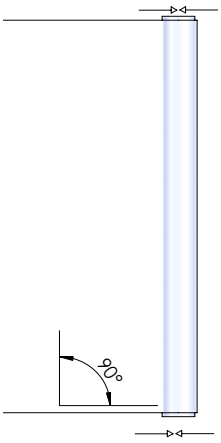

The conveyor frame should be as rigid as possible. It must not be distorted by the belt forces exerted. If the axes of sprocket shafts are not arranged at right angles to the belt conveyor direction, the belt will run off track (fig. on the right).

All rollers, drums and shafts in the system as well as supports and guide elements should be:

- Clean and in good state of repair
- Aligned axially parallel and at right angles with the conveyor direction
- Correctly laterally positioned in relationship to one another

Effect of temperature

Strong asymmetrical heating and loading on a properly adjusted belt can cause uneven changes in the belt's inner tension.

Alignment at a 90° angle

- Align the conveyor torsion-free and adjust all axes and shafts so that they are horizontal (measured across the conveyor direction).
- Measure the diagonal distance "a" between the ends as shown in the drawing below. If the distances are equal, the alignment is correct (fig A).
- If the shafts are too far apart or obstacles are in the way, you can measure the distance "b" between ends and a point "A" on the centre line of the conveyor (fig.B).

(fig A)

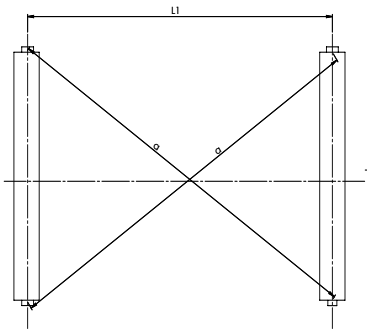

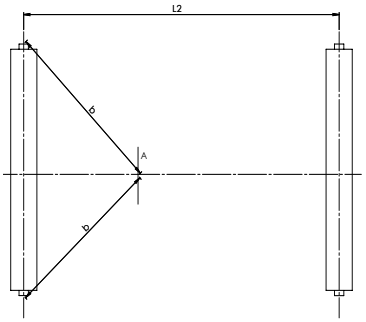

(fig B)

Belt Tracking at The Pulleys

Sprocket axes and shafts should be arranged adjustable to compensate possible manufacturing tolerances in the system and belt.
For so called "square" system (axis distance ~ belt width) or an even worse length/width ratio, the belt can no longer be adjusted with conical-cylindrical drums.
Flanged rollers can be used for additional belt tracking.

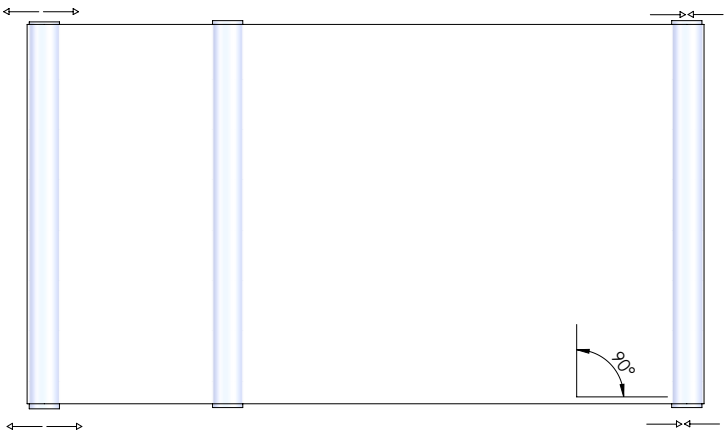

3.7. CENTER DRIVEN BELT

3.7.1 GENERAL

ELAClean® center drive belt is a flat polyurethane belt that has one or two rows of profiles for form-fit power transmission, this guarantee accurate positioning and slip-free.

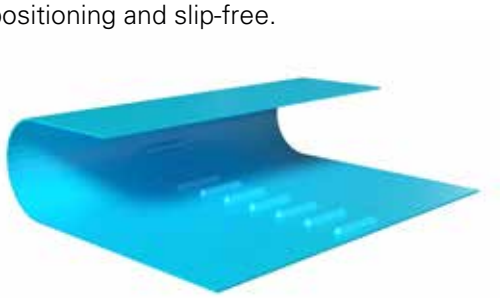

3.7.2 DRIVE TYPES

Head drive

This drive type is common for most conveyor layouts. The drive shaft is usually located at the head of the conveyor (out-feed side) and pulls the belt (fig. below). Pressure rollers can be installed if required.

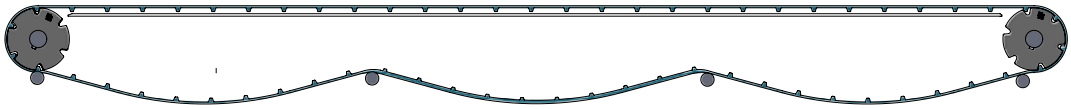

Pressure Rollers

If increasing the wrap angle at the drive pulley is needed, pressure rollers can be used. They can also be installed in case of is needed to minimize the distance between the carrying and return sides
The pressure roller diameter can be up to ½ d_{min} according to the wrap angle that can't exceed 15°.

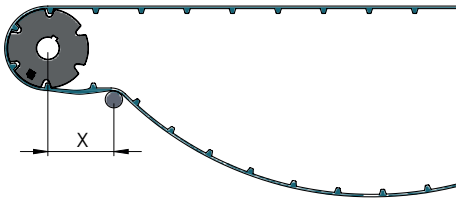

Center Drive

Due to limitations by using sidewalls and lateral V-guides on the return way, they can't be used for centre drive applications.

ELAClean® centre drive (omega drive is the typical layout) is used when:

- The smallest possible pulley diameters are required at the in-feed and out-feed sides to minimize the transfer gap and/or where reversing operation is required.

Reverse operation is more difficult to belt tracking and is not recommended by Elatech®

A large wrap angle on the drive guarantees optimal tooth meshing conditions for reliable power transmission in both running directions.

When light loads are used, the wrap angle can be smaller, which also gives the conveyor a flatter shape.

In both cases, the axes/shafts at the ends of the conveyor system are under higher loads because the belt pull is present as belt tension on both the tight and slack sides of the belt.

Some information to follow:

- Arrange the drive shaft in the middle if possible
- On the right and left of the drive unit, provide sections in which the belt sags. This sag is required for the necessary belt tension.
- The belt length between the snub roller and drive should be shorter than between the snub roller and the next support roller. Otherwise gravity take-ups are required in the desired sag area.

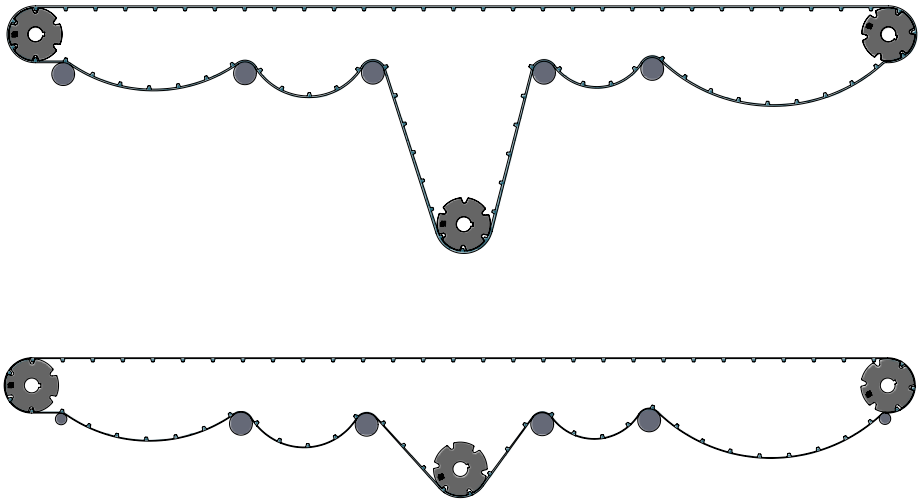

3.7.3 DRIVE AND IDLER SHAFTS

Sprocket drum diameter

Sprocket drum diameter should always be as large as possible. The smallest acceptable diameter is determined by:

- The effective pull to be transmitted
- The bending characteristics (d_{min}) of the belt used
- The bending characteristics (d_{min}) of the welded-on lateral and longitudinal profiles

Sometimes it's needed to increase the wrap angle by using pressure rollers.

Attaching Sprocket Drum and Idler Pulleys

All sprocket drums and idler pulleys have to be fitted to the shaft with slight gap in the axial direction.

- Use on of the attachment methods described in the previous section (**ELAClean®** positive drive belts)
- Spacers can be used to fill the gaps between the sprockets.

Sprocket drum type

ELAClean® centre drive belt can be driven by one of two following sprocket drum types:

- Sprocket with lateral guide (Self centering sprocket)
- Sprocket full width toothed (Not self centering)

Sprocket drum position on the drive

ELAClean® ECW-C4 has one or two rows of guides on the underside of the belt.

- Provide one sprocket for each row of guides
- Position the sprockets centrally to the rows of profiles on your ECW-C4.
- Position end rollers on the drive shaft as shown in the example below

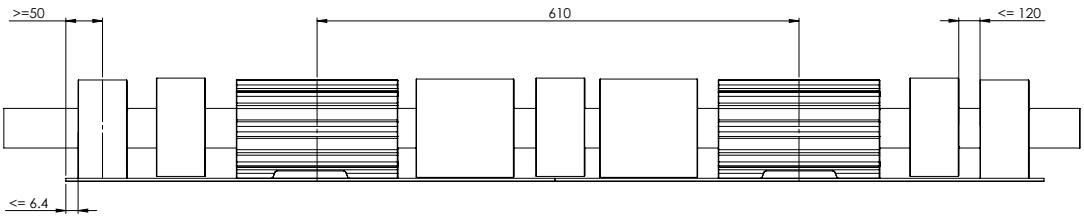

Sprocket drum positions on the idler shaft

Fit components to the idler shaft to match the drive shaft; but instead of sprockets use self centering tail rollers.

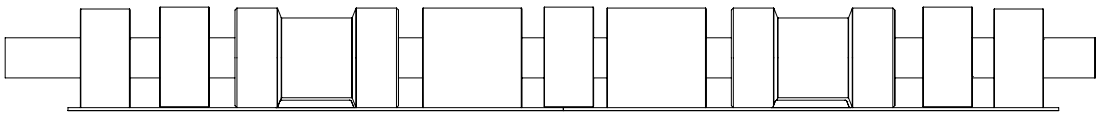

Recommendation for the ECW-C4 sprockets positioning

According to the belt width please follow these suggestions:

Belt width: 304,8mm - 12 inch

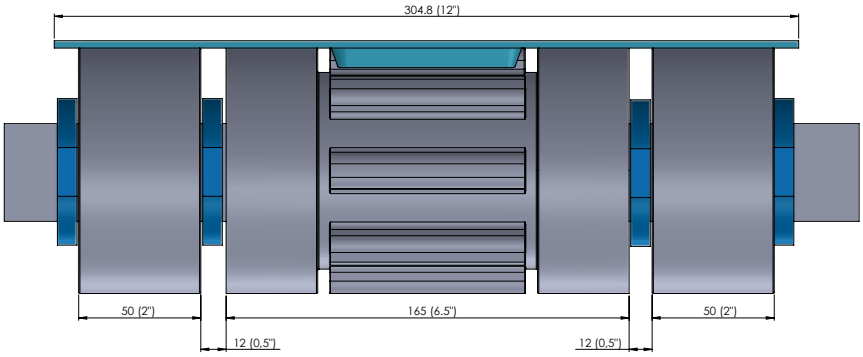

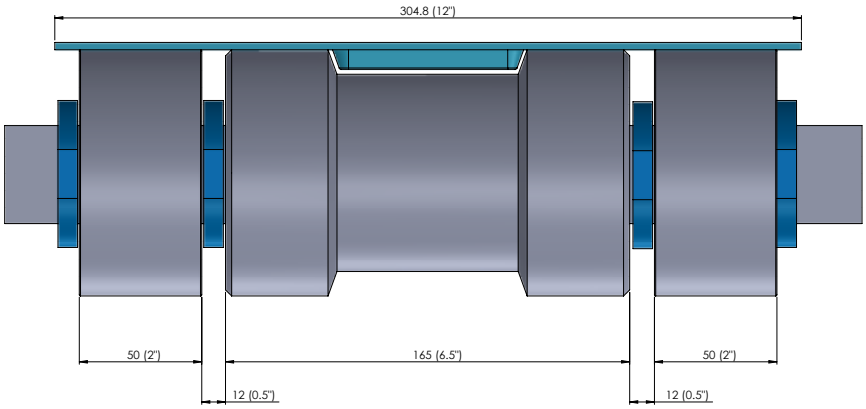

Belt width: 457,2mm - 18 inch

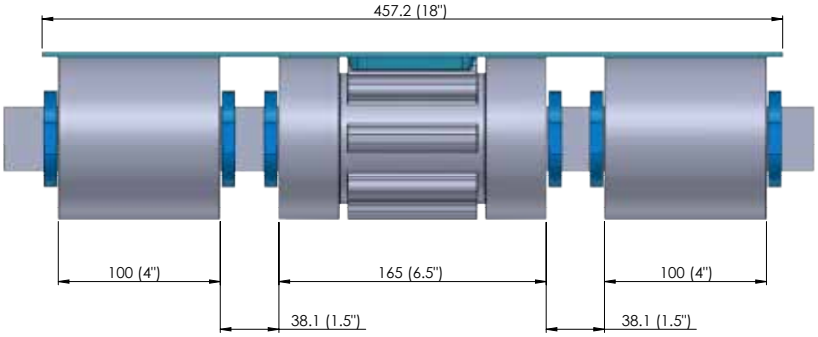

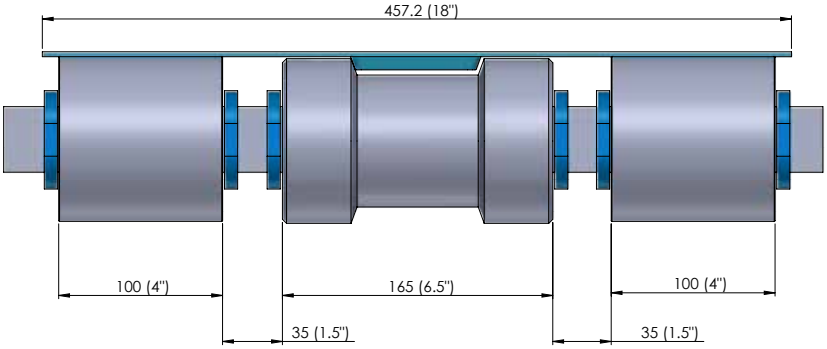

Belt width: 609,6 mm - 24 inch

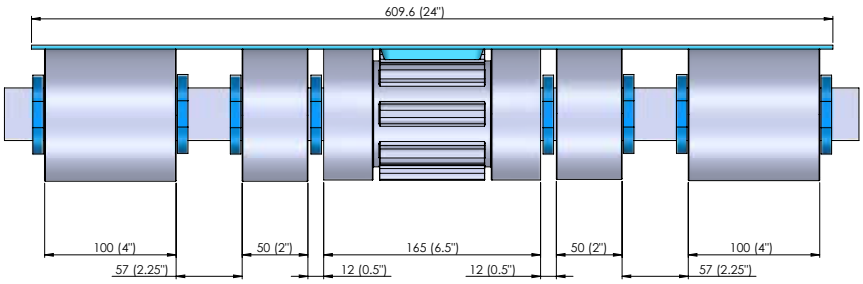

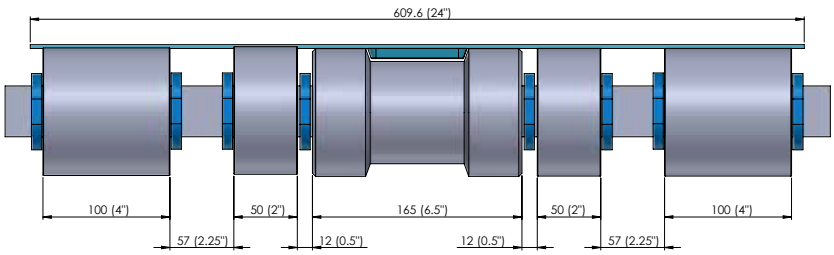

Belt width: 762 mm - 30 inch

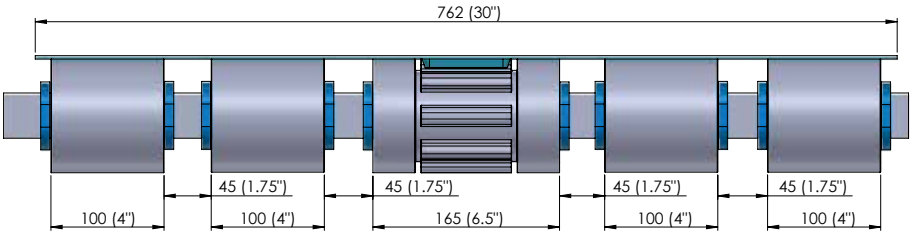

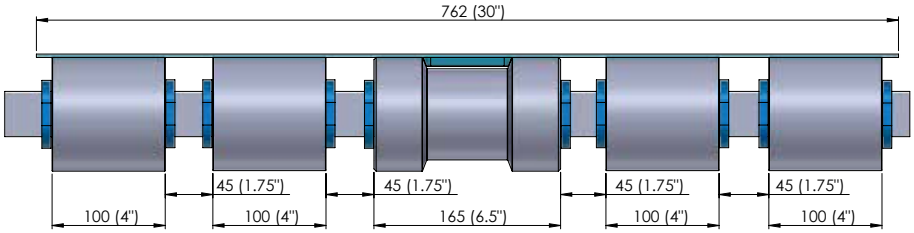

Belt width: 1219,2 mm - 48 inch

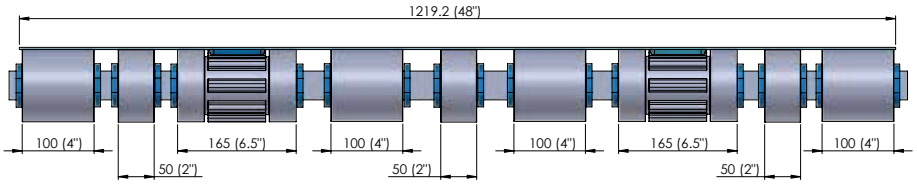

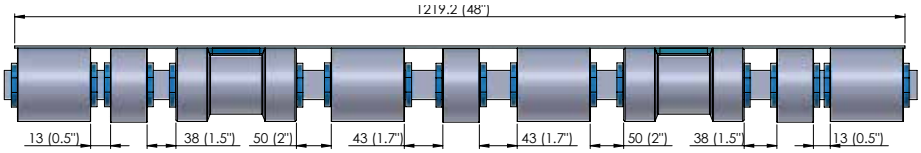

Belt width: 1800 mm - 70 inch

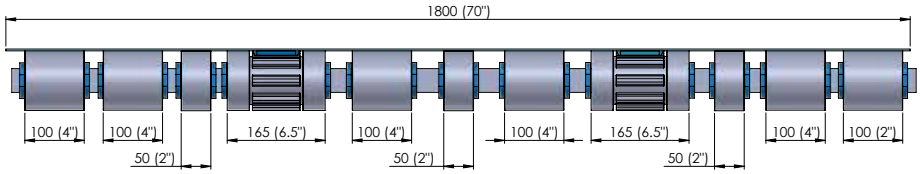

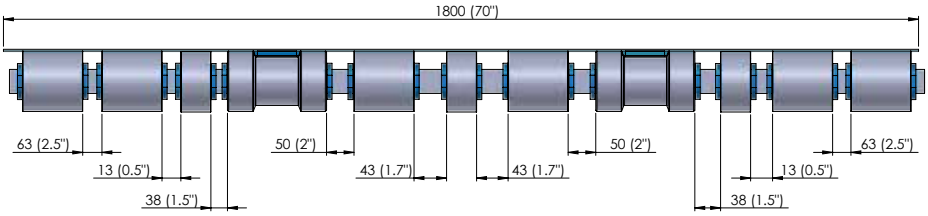

3.7.4 BELT TRACKING

Conveyor Design and State of Repair

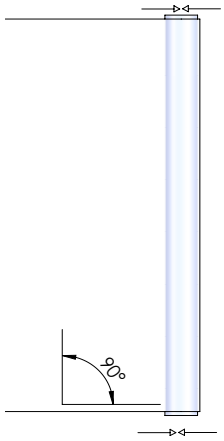

The conveyor frame should be as rigid as possible. It must not be distorted by the belt forces exerted. If the axes of sprocket shafts are not arranged at right angles to the belt conveyor direction, the belt will run off track (fig. on the right).

All rollers, drums and shafts in the system as well as supports and guide elements should be:

- Clean and in good state of repair
- Aligned axially parallel and at right angles with the conveyor direction
- Correctly laterally positioned in relationship to one another

Effect of temperature

Strong asymmetrical heating and loading on a properly adjusted belt can cause uneven changes in the belt's inner tension.

Alignment at a 90° angle

Align the conveyor torsion-free and adjust all axes and shafts so that they are horizontal (measured across the conveyor direction).
Measure the diagonal distance "a" between the ends as shown in the drawing below. If the distances are equal, the alignment is correct (fig A).
If the shafts are too far apart or obstacles are in the way, you can measure the distance "b" between ends and a point "A" on the centre line of the conveyor (fig.B).

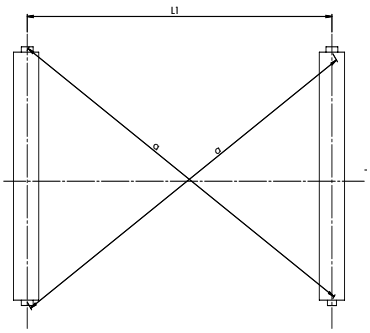

(fig A)

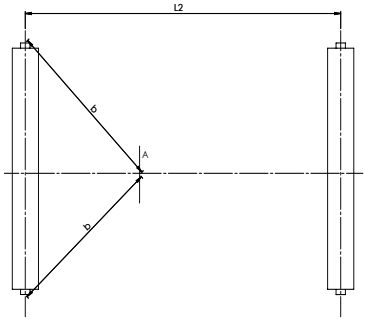

(fig B)

Belt Tracking at The Pulleys

Sprocket axes and shafts should be arranged adjustable to compensate possible manufacturing tolerances in the system and belt. For so called "square" system (axis distance ~ belt width) or an even worse length/width ratio, the belt can no longer be adjusted with conical-cylindrical drums. Flanged rollers can be used for additional belt tracking.

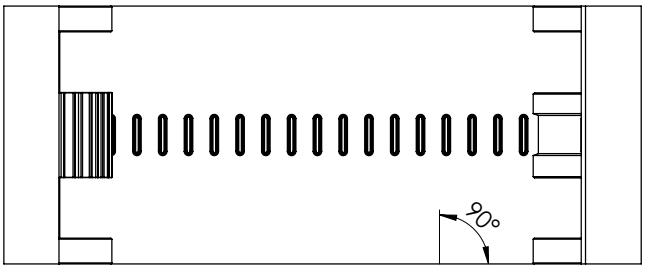

Guidelines

- Fit the belt, align pulleys A+B axially parallel, and create the desired sag in the return side.
- It may be necessary to use a belt tracking system near the end drum (e.g. for wide, short belts).

3.7.5 PRESSURE ROLLER

When using monolithic belt cordless, you may have some issues on the proper wrapping of it around the drive sprockets. Ensure the correct wrap angle is very important because it increases the drive torque and avoids slacking and 'jumping out teeth' as a consequence.

Elatech® recommends using a snub roller against the drive sprocket to prevent this issue. On the other hand, the installation of a snub roller might make the cleaning more difficult, that's why we recommend applying these rollers only if needed.

Generally, application with heavy loads or too little load, require the support of a snub roller. Also, in those application where is used the minimum diameter allowed, for the belt pitch, or the catenary sag is too big.

Another application in which the pressure roller has to be used is when the conveyor works in the two directions. In this case, the pressure roller (also called snub roller) ensures the smooth operation and they are usually placed before and after the drive sprocket, closest as possible to it.

Pressure roller dimension recommended:

- ECW-P1: above 0°C minimum 90mm, at or below 0°C minimum 120mm.
- ECW-P2 and EC-C4: above 0°C minimum 150mm, at or below 0°C minimum 250mm.
- ECW-F3: above 0°C minimum 75mm, at or below 0°C minimum 110mmm.

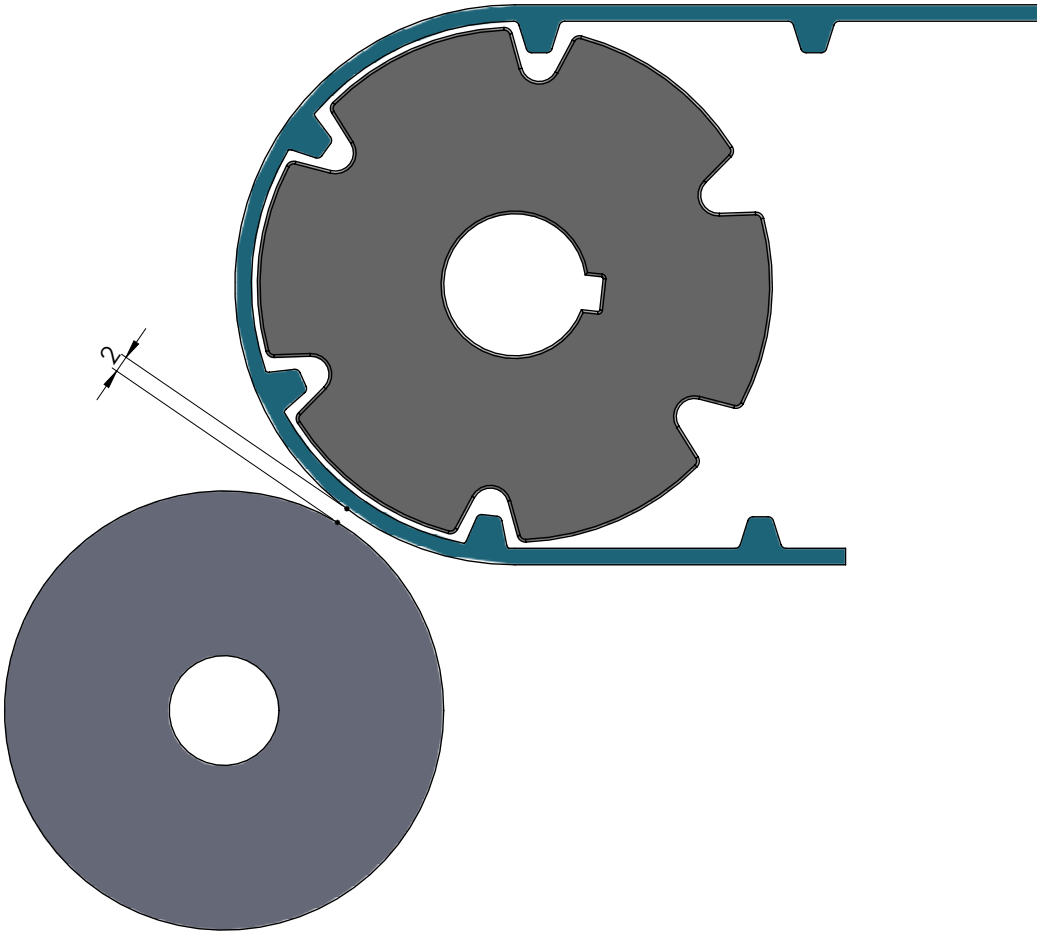

4.1. HORIZONTAL CONVEYORS

4.1.1 GENERAL

Horizontal conveyors are the most basic and widely used conveyor style world wide. They are used on assembly lines, small part handling, food processing and integrated inside more sophisticated machinery to give increased throughput. They have fewer limitations than other conveyor types in terms of dimensions, speeds, load and space required. They can be suited to accumulation or telescopic applications. Several conveyors made with two-shafts or on a slight incline. They can work with inclined conveyors at different angles, product type and flow rate.

The belt path on a horizontal conveyor is simple: typically, a straight-line centre to centre bed with the belt wrapped around two pulleys. Some applications may have additional rollers or features. Heavy wear and tear can result from incorrect conveyor design and belt selection. The capacity of the conveyor must be taken into consideration making sure the product is contained and does not fall under and inside the belt path. A conventional belt running without a product can fail from off-tricking or splice failure. **ELAClean®** belts save downtime and offer lower maintenance costs while creating a hygienic and cleanable working environment. On flat belts, adding guides can provide tracking that will not detach from the strain of flexing around pulleys. In the horizontal conveyors, where the belt works around two pulleys, one of them is the motor drive ad the second works like an idler. A take up system can be installed to increase the wrap angle to the drive pulley.

Generally the drive is located at the out-feed side of the conveyor. In this case it is called head-end, with this arrangement, the transmission forces are applied more efficiently than with a tail drive.

4.1.2 CONVEYOR LAYOUT

Up to length of 2000 mm, horizontal conveyors can be designed without belt supports in the return side (fig.A). With center distances > 2000 mm, belt supports (preferably return rollers) should be fitted in the return side (fig.B).
This prevents excessive sagging due to the belt's own weight.

- Use the belt sag to compensate for belt length changes due to temperature and load fluctuations. Specifically plan the longest unsupported section as a buffer zone for belt expansion.

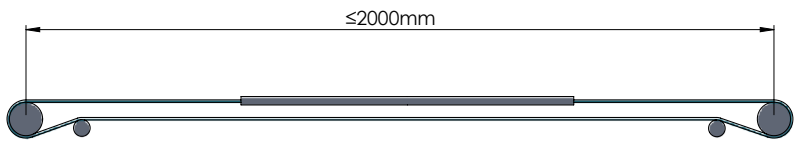

(fig A)

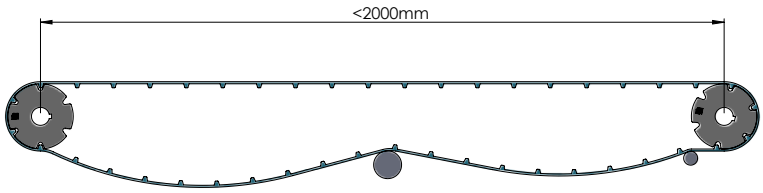

(fig B)

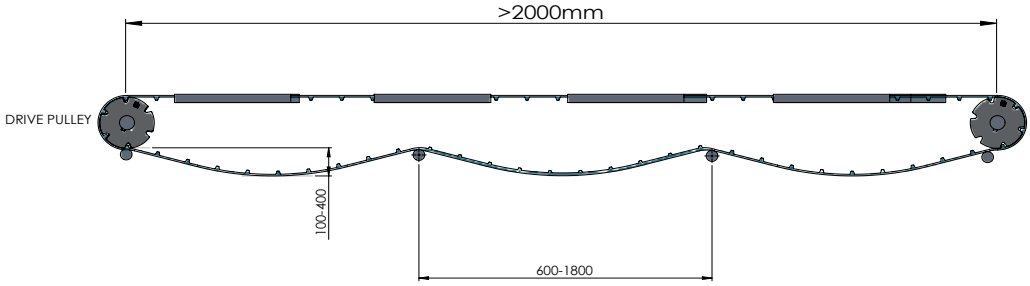

4.2 INCLINE/DECLINE CONVEYORS

4.2.1 GENERAL

Elevators using conveyor belts are an accepted solution for transferring product from one height to another. **ELAClean®** belts can be used for elevation applications to take products up or down according to the layout. Elevators can have one inclined section or additional horizontal sections that require the belt 'transition' from one level to another. There are several layouts of elevator conveyor, which can be simple two-axle conveyors or they can have one horizontal section (L-shaped) or two horizontal sections (Z, swan-neck, or goose neck). The transition areas are usually constructed in a reverse form on the belt return path and in the zone where the belt flexes around an arc on the work side, it back-flexes in the same zone underneath the conveyor. Correct design of these areas is critical to prevent belt failure. In addition, larger pulleys will be required to allow the belt to flex due to the addition of fabricated elements such as cleats, sidewalls, or top guides.

ELAClean® technical department provide a specific support for specific design layouts, numerous options of cleat types that can handle and contain product even at severe angles. Belt with scoop cleats can replace modular and bucket elevator belts. The benefits of this combination minimize cleaning and maintenance, reduce motor output, lower noise levels, and reduce the overall cost of ownership.

In straight incline/decline conveyors (without a change of angle), the conveyor belt runs around two end pulleys, one of which is a drive pulley. An idler can be used to increase the wrap angle at the motor drive.

The design of the drive depends on the conveyor direction (incline or decline). Conduct your own experiments to determine the conveyor angle that can be realized for your conveying task, and consider the use of sidewalls and/or top side cleats, if necessary.

4.2.2 INCLINE CONVEYOR

Generally, we recommend the following:

- Use only a head drive, in the top position, pulling the belt. Pushing the belt with the head drive in the bottom position, even without belt sag, is not recommended, due to fighting both gravity and product load
- Ensure there is always a screw tension take-up system or force dependent take-up on the tail, since the belt tension (generated by the belt sag) decreases with an increasing conveyor angle.
- If the belt width is wider than 600 mm, we recommend providing additional supports on the belt surface or supports on the return side.

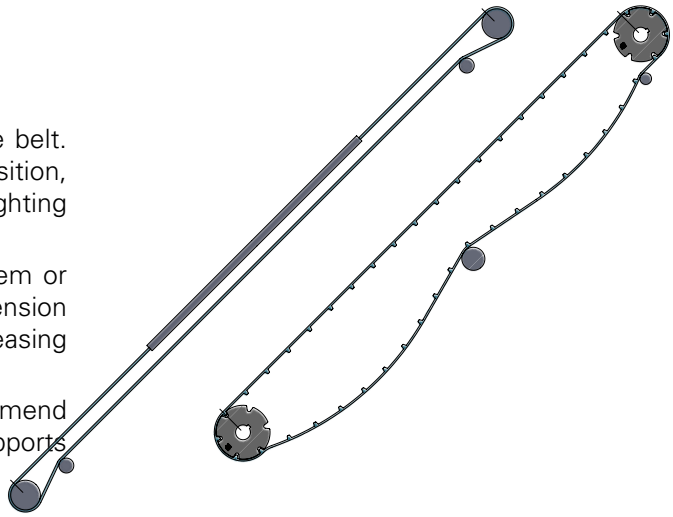

4.2.3 DECLINE CONVEYOR

Generally, we recommend the following:

- Use only a head drive, in the bottom position, pulling the belt, when belt sag is present. You can position the head drive in the top position, pushing the belt, when belt sag is not used.
- Ensure there is always a screw tension take-up system or force dependent take-up on the tail, since the belt tension (generated by the belt sag) decreases with rising gradient.
- If the belt is wider than 600 mm, we recommend providing additional supports on the belt surface or supports on the return side.

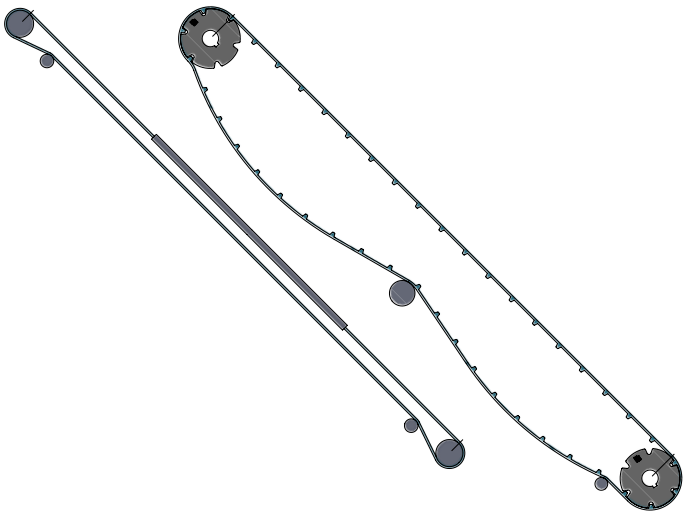

4.3. "L" CONVEYOR AND "Z" CONVEYOR

4.3.1 GENERAL

A *hockey-stick conveyor* (also called *L - conveyor*) has a horizontal conveyor section in the lower part of the conveyor, and a section with a gradient angle (fig. A & B). The conveyor direction is usually upwards. If there is limited space around the head drum, a tail drive can work but is generally not recommended. The belt undergoes at least one counter bend due to contact with guide elements on the carrying side.

A *swan-neck conveyor* (also called *Z - conveyor*) has a horizontal conveyor section at the bottom, a section with a gradient angle and a horizontal section at the top of the conveyor (fig. C & D). The conveyor direction is usually upwards. If there is limited space around the head drum, a tail drive can be used. In this case, the tensile forces in the belt can only be small, since the concave bending in the return side is critical. The belt undergoes at least two counter bends due to contact with guide elements on the carrying side. With this arrangement, the transmission forces are applied more efficiently than with a tail drive.

For incline conveying, it is often useful to equip conveyor belts with accessories such as cleats and sidewalls (fig. E).

- Cleats ensure that the transported material is carried on the belt.
- Corrugate sidewalls enclose the belt's conveying area at the sides.

In these cases, the minimum bending/counter-bending radii depend also according to the accessories that are used.

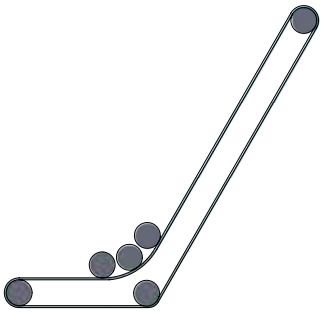

(fig. A)

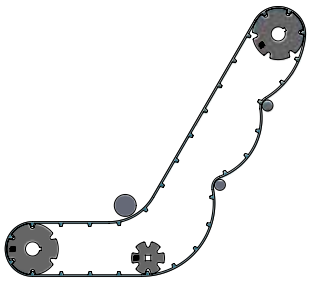

(fig. B)

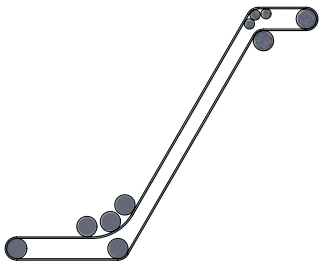

(fig. C)

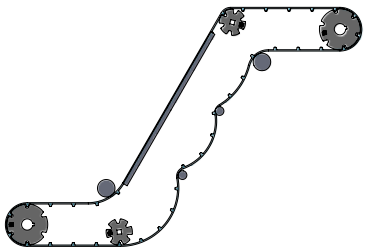

(fig. D)

Hockey-stick and swan-neck conveyors almost exclusively use head drives and the upper drum is used as the drive drum, and is provided with a friction coating (**ELAClean®** flat belt) or sprockets. The motor should be designed for low accelerations, otherwise system components can be over loaded.

Ensure there is always a screw tension take-up system or force dependent take-up on the tail, since the belt tension (generated by the belt sag) decreases with an increasing conveyor angle.

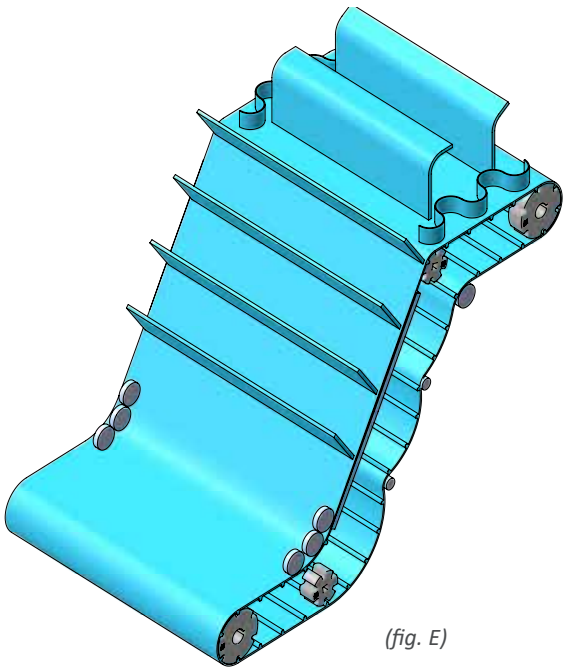

(fig. E)

4.3.2 BELT GUIDANCE IN THE CONCAVE CURVE (TOP SIDE OF BELT)

Elatech® recommends roller support on any counter-bending/transition section of the conveyor:

- Use hold down rollers (fig. on the rigth) having the permissible d_{min} to hold down the belt edge (minimum width "B" in each case 30mm); cylindrical rollers for belts without longitudinal profiles on the carrying side, or V-pulleys or guide rollers (fig. on the right) for belts with longitudinal guides on the carrying side (guide profiles).

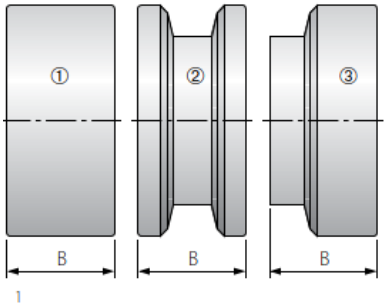

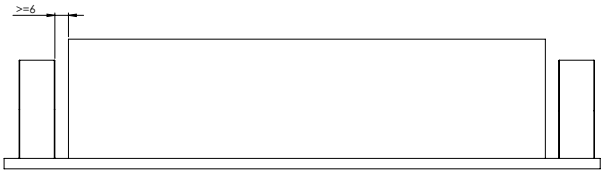

- **Elatech®** doesn't recommend the use of skids or wear strips.
- When using sidewalls and/or lateral guides, the smallest permissible deflection diameter increases if the d_{min} of the belt on its own.
- When using V-shaped guides, the smallest permissible deflection diameter increases if the d_{min} of the profile is larger than the d_{min} of the belt on its own.
- Between the belt supports and profiles/sidewalls, allow a gap at the side of at least 6 mm.
- For belt widths exceeding 600mm, additional support rollers are recommended on the return side.

For low and unchanging gradient angles, it is sufficient to use one pressure roller on each side of the belt

For larger and changing gradient angles, multiple pressure rollers (fig. A) can be used at each side of the belt (at least three). Their diameter can be smaller when using a single roller per side. An overall deflection radius of min 200mm must be maintained, however, since the arcs of contact at the local deflection points could cause breaks in the spliced area of the belt (fig.A).

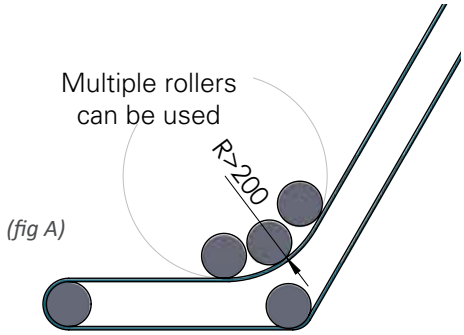

(fig A)

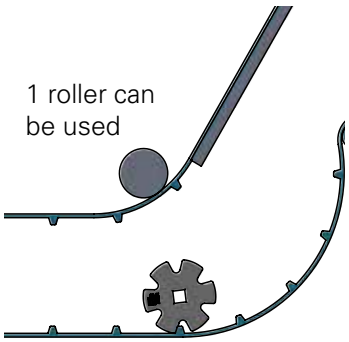

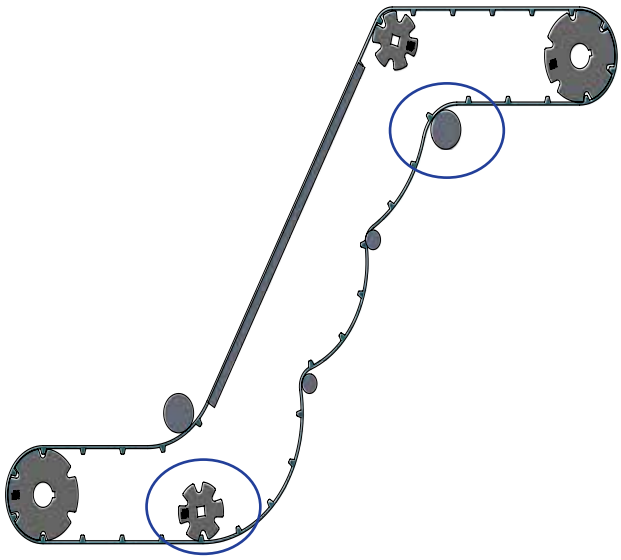

4.3.3 BELT GUIDANCE IN THE CONVEX CURVE (UNDERSIDE OF BELT)

Especially if the belt is operated dry without lubrication, high friction resistance occurs at this bending point.

- Preferably (depending on the belt type) use rollers or sprockets as an end pulley that meet the permissible d_{min} across the full width of the belt.
- **Elatech®** doesn't recommend the use of skids or wear strips.

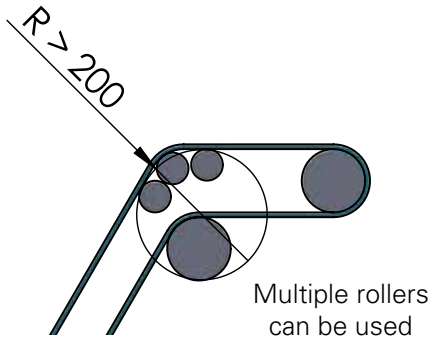

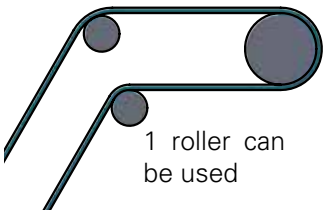

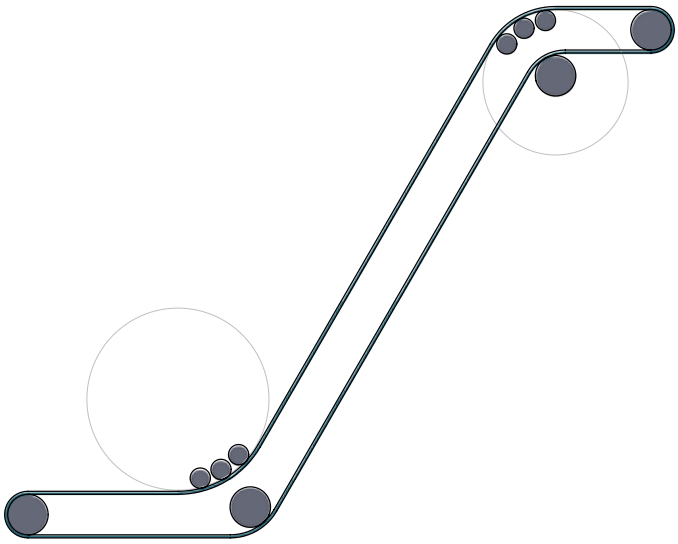

side shoes

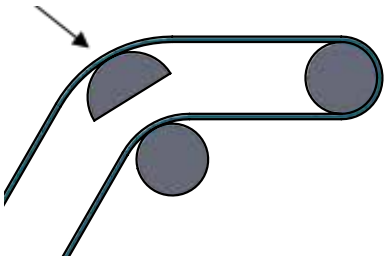

4.4. TROUGHED CONVEYORS

4.4.1 GENERAL

Trough conveyors are commonly used on transfer lines, small parts handling, and food processing. They share most of the design characteristics of two-axle conveyors but with the additional raised edges to contain the product on the belt. This feature requires belts to be flexible and to maintain their shape, troughing is one of the best solutions for containing bulk product, especially for powder or product in granular form. Troughing causes products to accumulate closer to the centre of the belt. While this is contrary to the even distribution of the product over the belt surface, it gives better tracking balance to the belt and eliminates the need for containment side walling, preventing spillage or product loss. The depth of the trough can be different but the angle at which the belt sides can trough successfully is determined by mechanical factors that include belt thickness, flexibility and width.

4.4.2 TRANSITIONAL AREA BETWEEN END PULLEY & TROUGH

Where the troughed belt transitions from the drum onto the supporting rollers (and viceversa), the edges are subjected to increased elongation (see the picture below).

Therefore, please observe the guide values listed in the table for the transition length l_s.

L = BELT width W [mm] · K1

Trough angle β	15°	20°	30°	40°
K1	0.7	0.9	1.5	2

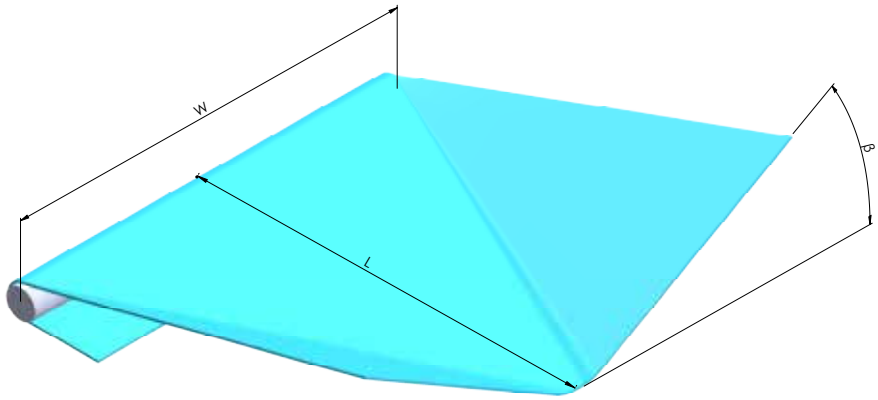

4.4.3 TROUGH ANGLE

Possible trough angles depend on the belt width:

- Belt width < 300mm trough conveying not recommended
- Belt width 300 - 500mm trough angle up to 30°
- Belt width > 500mm trough angle up to 50°

The possible trough shape and belt support design depend on the conveying task and the **ELAClean®** type used.

Belt support for ELAClean® ECW-C4 Centre Driven belt

- The belt can be supported by wearstrips, full surface plate and by rollers (U-shaped, V-shaped or also round).
- The profile rows in **ELAClean®** centre driven belt must lie at the bottom of the trough and not be part of the curved section of the belt.
- Use only materials according to the specifications written in this manual.
- Rollers should extend outwards at least to the edge of the belt. The spacing in the conveyor is normally between 400mm and 700mm.
- Add lateral belt guides if necessary.
- Make sure that the transitions in the regions at the beginning and end of the trough are well rounded.
- The top edges of the head and tail pulleys and the middle trough plane must lie in one plane.

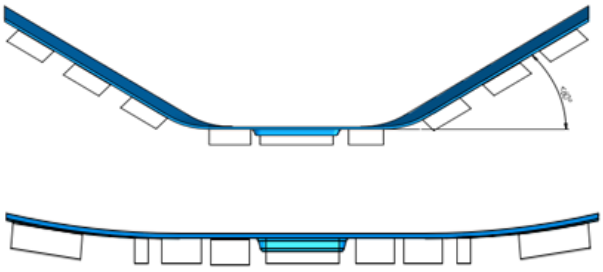

Belt support for ELAClean® Flat belt

- The belt can be supported by wearstrips, full-surface and by rollers (U-shaped, V-shaped or round).
- Use only materials according to the specifications in the materials table
- Rollers should extend outwards at least to the edge of the belt. The spacing in the conveyor direction is normally between 400mm and 700mm.
- Add lateral belt guides if necessary.
- Make sure that the transitions in the regions at the beginning and end of the trough are well rounded.
- The top edges of the head and tail pulleys and the middle trough plane must lie in one plane. If the trough bottom is not supported by a wearstrip, a maximum sag of 30mm is permissible.

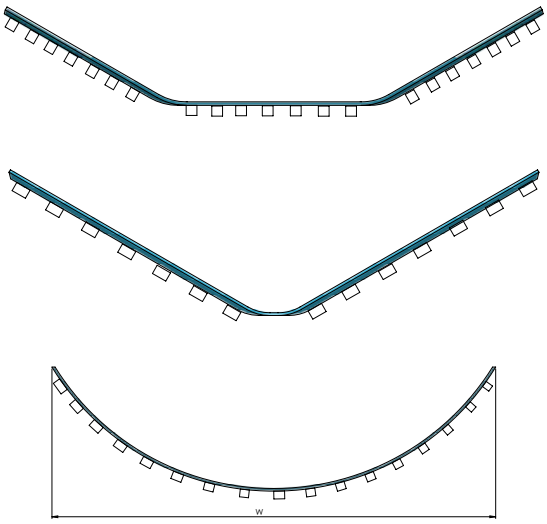

Belt washing & Cleaning systems

Cleaning the belts is a time-consuming and labour-intensive process, involving high consumption of energy and time, therefore, the execution is an expensive process. There are many ways to optimize this process, from complete stationary, automatic and/or semi-automatic systems, to mobile cleaning equipment.

Cleaning agents and disinfectants

When using cleaning agents and disinfectants, always take into account the manufacturer's instructions on concentrations and reaction times, as well as information on the resistance of the material of the conveyor belt. Improper use shortens the life of conveyor belts. They can become porous and break down. Cleaning products and disinfectants must not be mixed with each other.

Cleaning agents

A good result of the cleaning process depends on the concentration of the cleaning agent, the temperature, generally between 50°C - 75°C, and the cleaning exposure time.

Different cleaning agents vary significantly in the way they work. The correct choice of a cleaning agent is decisive for a good result and depends on the following factors:

- Type of soiling
- Belt material
- Water quality/hardness
- Availability/possibility of cleaning methods
- Cleaning costs incurred

The type of dirt is important, i.e., what solvent can be used to remove the residue elements.

(Example: Alkaline cleaning agents can be used to remove organic residues, e.g., fat, sugar, protein and starch. Acidic cleaning agents can be used to remove inorganic residues, e.g., salts, water hardness, rust, calcium carbonate, tartar and scale.)

Solubility of various residues:

Type of soling	Solubility	Removing soiling	Changes when heat is added
Sugar	Water soluble	Easy	Caramelization, very difficult to clean
Grease and oil	Not water soluble, soluble in an alkaline, tenside/emulgator soluble	Difficult	Polymerization difficult to clean
Proteins	Water insoluble, alkaline soluble, soluble inacids	Very difficult	Denaturation, very difficult to clean
Simple salts	Water soluble, acid soluble	Easy	None
Complex salts (CaPO4)	Water soluble, acid soluble	Difficult	Interaction of the salts, more difficult to clean

Disinfectants

Disinfection is defined as the specific removal/killing of pathogens on an object or surface with the help of chemical or physical methods.

Following processes are possible:

- Physical by heat.
- Chemical by means of disinfectants, which must be completely removed before production runs.
- Radiation.

Recommended sanitation methodology

In the food industry a hygienically designed conveyor reduces the maintenance time and water required for cleaning and therefore the overheads (e.g., clean-in-place "CIP" systems: circulation of a cleaning solution through production machines).

Step 1 : Remove large food residues mechanically (use or scrapers, brushes etc.).

Step 2 : Rinse conveyor with hot water for further remove food soils (preferably belt is not under tension).
Approximately 60°C / 140°F. - Avoid high water pressure (recommended water pressure 10 – 20 bar).

Step 3 : Apply cleaning detergent to the conveyor and belt.
Usually alkaline/surfactant combination.

Step 4 : Rinse conveyor with hot water.
Approximately 60°C / 140°F. - Avoid high water pressure.

Step 5 : Apply a sanitizer (germicide) to reduce micro-organisms to safe level.

Step 6 : Rinse with water if necessary (dependent of sanitizer toxicity level).

Acids and Alkaline solutions

TPU has limited resistance to acids and alkaline solutions. It can only withstand diluted acids and alkaline solutions at room temperature for short periods of time.

Saturated hydrocarbons

When exposed to saturated hydrocarbons, TPU may expand slightly. Moderated swelling is known to occur with Diesel oil, Isooctane, Petroleum Ether and Kerosene. While only temporary, this change can lead to an interim reduction in a TPU tear resistance.

Please note: Flexible grades are more prone to swelling under these circumstances than rigid alternatives.

Once the hydrocarbon is removed, swelling normally subsides and mechanical properties should return to normal.

Aromatic Hydrocarbons

As with saturated hydrocarbons, contact with aromatic hydrocarbons such as benzene and toluene can cause the TPU swelling, resulting in a reduction of the mechanical performance. Depending on the hydrocarbon in question, the scale of swelling can vary. In some cases, it could be prominent with the material increasing in weight by up to 50%.

Common Sanitizing Chemicals

Sodium hypochlorite (bleach) is a common sanitizer used in the food industry that attacks all families of TPU. In order to maximize the belt life, the time of exposure that the Sodium hypochlorite solution requires, should be minimized and the solution has to be kept and used at room temperature.

The Polyether based TPU, are more resistant to attack of some typical chemicals used in the food industry, including the sodium hypochlorite, if compared with the polyester based TPU.

Recommendations for the use of Sodium Hypochlorite

- Maximum concentration of 200 ppm of available chlorine
- If concentration exceed 200 ppm of available chlorine, belt should be rinsed with water, after the application of sodium hypochlorite per regulation 21 CFR part 178 (US government regulations).
- Maximum residence time on concentration level exceeding 200 ppm on the belt surface: 20 minutes
- Maximum recommended solution temperature 32 °C (89.6 °F)

Sodium hydroxide (caustic soda) can be found in several cleaning solutions, and it does not affect the polyether based TPU of **ELAClean®**.

Quaternary ammonium compound is a common sanitizer in the food industry and it also does not attack **ELAClean®** belt.

Chemical resistance at room temperature

	Polyurethane
Water	++
Concentrated acids	-
Diluted acids	++
Concentrated lies	-
Diluted lies	++
Oxidants	+
Solvents (e.g., alcohol)	++

Legend:

+++ High resistance
++ Good resistance
+ Low resistance
- No resistance

When it comes to polyurethane, these links are known as "polyols." The three main types are polyester, polyether, and polycaprolactone. For the purposes of this discussion, we will ignore polycaprolactone, which is really a sub-group of the polyester family, as it is primarily used to make O-rings and seals. Of the three types, polyester is the most widely used type of polyol. Ester-type urethane offers good tear and abrasion resistance, oil resistance and long-term heat damage resistance. The downside of ester- based urethanes is that when confronted by both heat and moisture, they begin to break down because the moisture attacks and breaks the polymer chains, thus making them shorter and the material much weaker. Depending on the amount of humidity in the air and how hot the climate is, this can take two years or longer to occur. If used in an extremely hot and humid area, this breakdown could take as little as a few weeks. It should also be noted that polyester-based urethanes can also be affected by bacteria.
On the flip side you have polyether-based materials. Inside of the polyether family, you have two distinct groups, which will be discussed next. As a family of materials, polyether-based urethanes are not as affected by water as polyesters, but cannot match polyesters when it comes to oils and solvents. Ethers are also better at dealing with low temperate environments, but the trade-off is that it cannot stand up to long term heat as well as an ester can. Ethers are also better when it comes to rebound, heat build-up, microbe resistance, and resistance to deformation.

	Ester	Ether
Tensile & Tear Strength	+	-
Abrasion Resistance	+	-
Water Resistance	-	+
Oil Resistance	+	-
Low Temperature Flexibility	-	+
Microbe Resistance	-	+
Moisture Vapor Transmission	-	+

Chemical name	Excellent	Good	Limited	Not recommended
Acetic Acid, 3%			C	
Acetone				D
Ammonium Carbonate	A			
Ammonium Hydroxide		B		
Ammonium Nitrate	A			
Ammonium Phosphate	A			
Ammonium Sulphate	A			
Ammonium Chloride		B		
Amyl acetate				D
Amyl alcohol	A			
Animal Fats (Lards)	A			
Animal Fats (Oils)	A			
Aromatic Hydrocarbons			C	
Aromatic Vinegar		B		
Baking Soda	A			
Barium Hydroxide	A			
Beer	A			
Beer Sugar Liquors	A			
Bleach Solutions		B		
Blood		B		
Borax	A			
Boric Acid	A			

Chemical name	Excellent	Good	Limited	Not recommended
Butter	A			
Butter Animal Fat			C	
Butyl Acetate				D
Butyric Acid				D
Calcium Bisulfite				D
Calcium Hydroxide	A			
5% Calcium Hypochlorite	A			
Cane Sugar liquors	A			
Carbon Dioxide	A			
Carbonated Beverages		B		
Carbonic Acid	A			
Castor Oil	A			
Cheese	A			
Chloric Acid				D
Citric Acid	A			
Coconut Oil	A			
Corne Oil	A			
Cottonseed Oil				D
Dichloroethane			C	
Dichloroethylene			C	
Dimethyl Formamide (DMF)				D
Ethanol		B		
Ethyl Butyl Ketone				D
Ethylene Glycol	A			
Fish Oil	A			
Fruit Acids	A			
Gelatin				D
Glucose	A			
Glycerol (Glycerin)	A			
Honey			C	
Isopropanol				D
Lactic Acid, Cold	A			
Lard (Animal Fat)	A			
Lineolic Acid		B		
Linseed Oil		B		
Magnesium Acetate				D
Magnesium Chloride	A			
Magnesium Hydroxide		B		
Meat and Bone Meat	A			
Methanol (Methyl Alcohol)			C	
Methyl Butyl Ketone			C	
Methyl Ethyl Ketone (MEK)				D
Milk	A			
Molasses	A			
Mustard	A			

Chemical name	Excellent	Good	Limited	Not recommended
Nitric Acid, 3%				D
Nut Oil	A			
Nicotine		B		
Oils and fats	A			
Oleic Acid	A			
Olive Oil	A			
Palm Kernel Oil	A			
Palmitic Acid		B		
Peanut Oil	A			
Pectin (Liquor)	A			
Phosphoric Acid 20%			C	
Pine Oil	A			
Potassium Chloride	A			
Potassium Hydroxide		B		
Potassium Nitrate	A			
Salt Water	A			
Silicone Greases	A			
Silver Nitrate	A			
Soap Solutions			C	
Soda	A			
Sodium Sulfite, 3%		B		
Sodium Hypochlorite, 0,5%		B		
Soybean Oil	A			
Steam , 100-110°C	A			
Sugar	A			
Table Salt	A			
Tannic Acid, 10%	A			
Tomato Juice	A			
Tomatoes, Ketchup	A			
Urine	A			
Uric Acid, 3%	A			
Vegetable Oils	A			
Vinegar	A			
Water	A			
Whiskey/Wine	A			
Wax	A			

Legend:
A: Excellent resistance - **B:** Good resistance - **C:** Limited resistance - **D:** Not resistant

7.1 ROLLS CODE

EC W 1800 P2 N / A U G

ELAClean®

Rolls

Width (mm)

P1 = Toothed 1 Inch
P2 = Toothed 2 Inches
C4 = Center Lug 39,7 mm
C4-4 = Center Lug 39,7 mm (extra thickness) (*)
F3 = Flat 3 mm
F2 = Flat 2 mm

N = no cords
K = kevlar cords

G = Glossy
M = Matte
I = No-cling
A = Flat Matte + Glossy
C = Flat Glossy + No-cling
F = Flat No-cling + Matte

U = Sky blue
O = Ocean blue
N = Navy blue
V = Endura blue
W = White

A = 95 Sh. A - high hydrolysis resistance
B = 52 Sh. D - high abrasion resistance (*)
E = 85 Sh. A - high hydrolysis resistance
F = 85 Sh. A - high abrasion resistance (*)
I = 92 Sh. A - high abrasion resistance (*)
L = 75 Sh. A - high hydrolysys resistance (*)
M = 80 Sh. A - high hydrolysys resistance (*)

(*) Available on request, please contact our sales department.

7.2 BELTS CODE

EC J 0914 C4 N 03970 X

ELAClean®

J
M
E
P
H

J = Butt welded
M = Open End
E = ELALace
P = Plastic fasteners
H = Stainless Steel fasteners

Width (mm) - 4 digits

P1 = Toothed 1 Inch
P2 = Toothed 2 Inches
C4 = Center Lug 39,7 mm
C4-4 = Center Lug 39,7 mm (extra thickness) (*)
F3 = Flat 3 mm
F2 = Flat 2 mm

N = no cords
K = kevlar cords

X = If it is machined

Length (mm) - 5 digits

(*) Available on request, please contact our sales department.

7.3 SIDEWALLS CODE

EC W 0150 S1 N / E U G

S2

S3

ELAClean®

Sidewalls Rolls

Width (mm)

S1 = Sidewall 1.7mm thickness
S2 = Sidewall 2.0mm thickness
S3 = Sidewall 2.8mm thickness

G = Glossy + Glossy
C = Glossy + No-cling

U = Sky blue
V = Endura blue

E = 85 Sh. A - high hydrolysis resistance
F = 85 Sh. A - high abrasion resistance (*)

No cords

(*) Available on request, please contact our sales department.

7.4 CLEATS CODE

EC F 4 S 200 F 1200 A U G

Y R

Z

U

ELAClean®

Cleats

Thickness (mm)

S = Straight Cleat
Y = Bent Cleat 120°
Z = Scoop Cleat 90°
U = inclined Cleat

Height (mm)

G = Glossy + Glossy
Q = Glossy + No-cling
I = No-cling + No-cling

U = Sky blue
V = Endura blue

A = 95 Sh. A - high hydrolysis resistance
B = 52 Sh. D - high abrasion resistance (*)

Length (mm)

F = Flat top
R = Round top

(*) Available on request, please contact our sales department.

(*) Available on request, please contact our sales department.

ELAClean® Notes

7.5 V-GUIDES

EC VGK 6x4 S / E U

10x6 T

13x6.5

13x8

17x11

ELAClean®

Guides

Guide dimensions

S = Smooth
T = Notched

(*) Available on request, please contact our sales department.

U = Sky blue
O = Ocean blue
N = Navy blue
V = Endura blue
W = White

E = 85 Sh. A - high hydrolysis resistance
F = 85 Sh. A - high abrasion resistance (*)

7.6 SPROCKETS CODE

EC - S M 1 S 10 S 40 . UP

I 2

4

ELAClean®

Sprockets

M = Machined
I = Injected

1 = P1
2 = P2
4 = C4

S = toothed sprocket
I = no flanged idler
F = flanged idler
C = C4 self-centering sprocket
T = C4 tail self-centering idler
L = C4 lateral roller 2" wide (50mm)
N = C4 lateral roller 4" wide (100mm)

UP = UHMWPE
HP = HDPE
PA = Nylon
PP = PP
PO = POM

Bore dimension

S = square bore
R= round bore
X = star bore

Number of teeth (Z)

7.7 ROLLER CODE

EC -	R	M	080	RR	20	UP
		I		FR	25	
					.75	
					1.0	

ELAClean®

Rollers

M = Machined
I = Injected

Diameter

RR = Return Roller
RF = Flanged Return Roller

20mm
25mm
.75 inch
1.0 inch

UP = UHMWPE
HP = HDPE
PA = Nylon
PP = PP
PO = POM

7.8 SCRAPERS

EC -	B	H	02000	W
		S		

ELAClean®

Scarpers

H = Hard tip (90 Sh.A)
S = Soft tip (75 Sh.A)

Length (mm) - 5 digits

W = White

(*) Available on request, please contact our sales department.

ELAClean® MONOLITHIC URETHANE CONVEYOR BELTS

Is a registered trade-mark of Elatech S.r.l.

ELATECH is a registered trade-mark of Elatech S.r.l.

ELAClean is a registered trade-mark of Elatech S.r.l.

Copyright 2026 ELATECH S.r.l. - Errors & omissions excepted

The data contained in this publication are for information purposes only and do not enlarge, amend or imply any warranty other than provided by the manufacturer with the product. In the spirit of continuous technical improvement, the specifications in this catalogue are subject to change without notice. For further information, please refer to the sales condition published on the Elatech® web page, constantly updated.

EM900-02/4 - 06/26 (100 - 06/26)

Italy

SIT SPA
Via A. Volta, 2
20047 Cusago (Milano)
Italy

Tel: +39 02 89144.1
E-mail: info@sitspa.it
Website: www.sitspa.it

France

FOGEX
215 Rue Henri Barbusse
95100 – Argenteuil
France

Tel: +33.01.34344600
E-mail: info@fogex.com
Website: www.fogex.com

Switzerland

SIT (Schweiz) AG
Lenzbüel 13
8370 – Sirnach
Switzerland

Tel: +41.71.969.50.00
E-mail: info@sit-antriebstechnik.ch
Website: www.sit-antriebstechnik.ch

Germany

SIT ANTRIEBSELEMENTE GmbH
Rieseler Feld 9
33034 – Brakel
Germany

Tel: +49.5272.3928.0
E-mail: info@sit-antriebselemente.de
Website: www.sit-antriebselemente.de

Spain

DINAMICA Drive Solutions, S.A.
Química, 14
08740 – Sant Andreu de la Barca (Barcelona)
Spain

Tel: +34 93 6533500
E-mail: dinamica@dinamica.net
Website: www.dinamica.net

China

SIT ELATECH (ANHUI) CO.,LTD.
No.11,Industrial Avenue - Xinfa Town
Langxi County, Xuancheng City
Anhui Province - 242100
China

E-mail: info@sit-shanghai.com
Website: www.sit-shanghai.com

China

SIT ELATECH (SHANGHAI) CO., LTD.
Room 804, Building 2, Alley 8666,
Hunan Highway
Pudong New District – Shanghai – 201314
China

E-mail: info@sit-shanghai.com
Website: www.sit-shanghai.com

India

SIT PTC INDIA PRIVATE LIMITED
S. No. 353/A, Gauddara Road
A/p. Gauddara, Shriram Nagar
Khed-Shivapur, Tal.:- Haveli,
Dist.:- Pune - 412205
India

E-mail: a.nangre@sitspa.com
Website: www.sit-elatech.com

United States

SIT ELATECH Inc.
11540-A Cordage ST.
Charlotte – NC 28273
United States

Tel: +1.704.357.8811
E-mail: info@sit-elatech.com
Website: www.sit-elatech.com

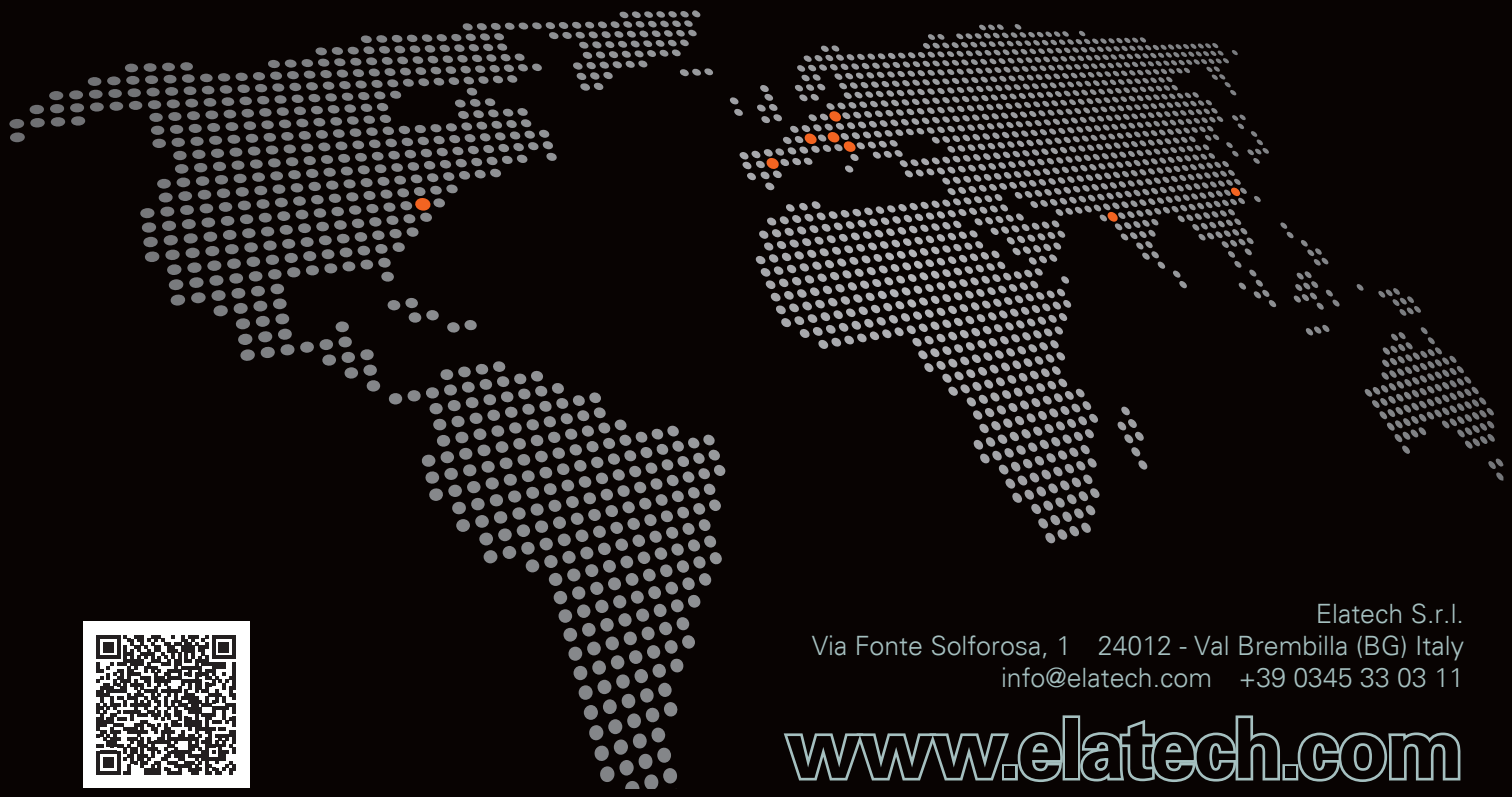

Elatech S.r.l.
Via Fonte Solforosa, 1 24012 - Val Brembilla (BG) Italy
info@elatech.com +39 0345 33 03 11

www.elatech.com

ELATECH belts are 100% Made in Italy and distributed worldwide thanks to sister companies in Europe, North America, Asia and more than 150 distributors around the world.